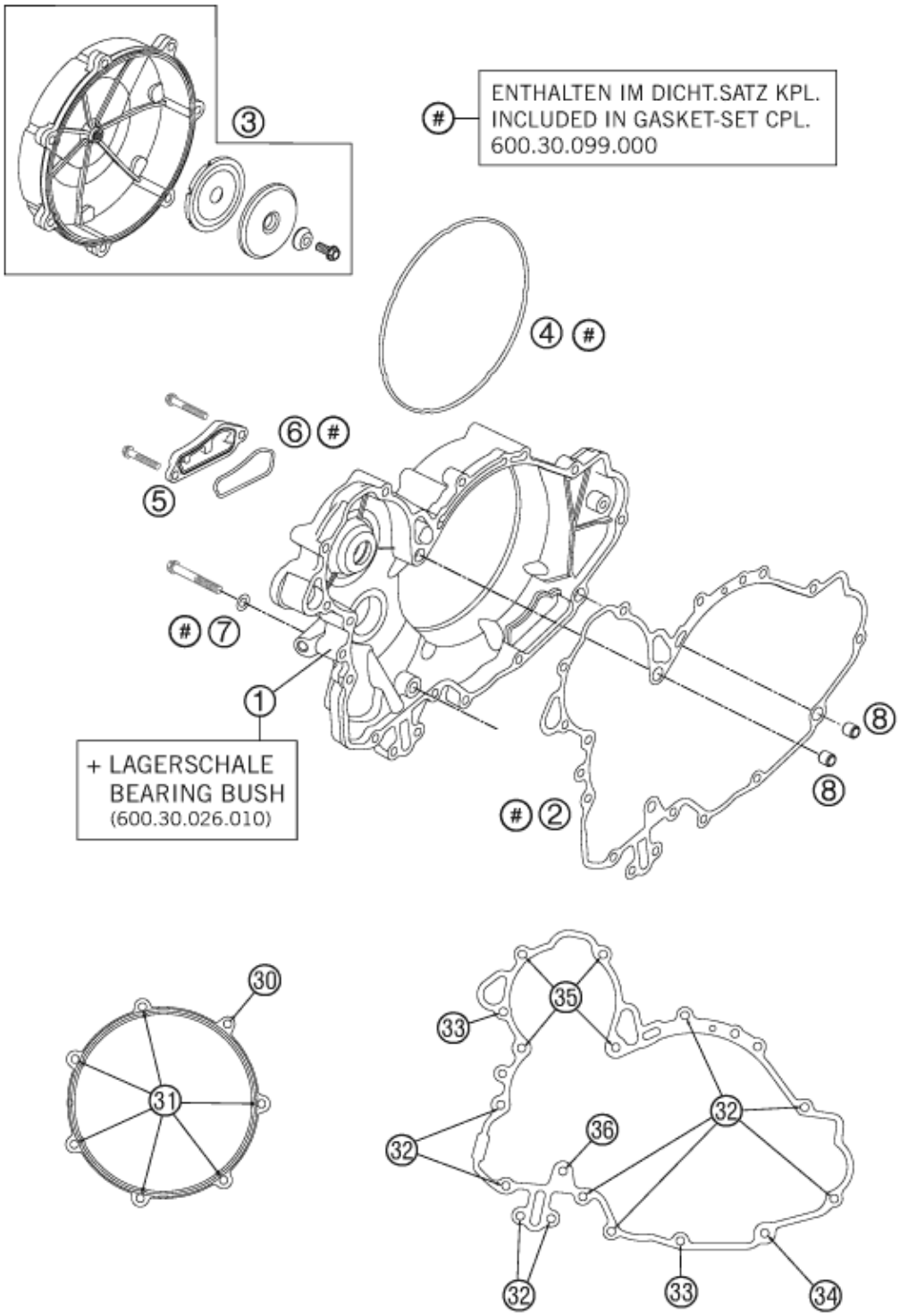

Pos	Part Number	Description	Additional Text	Quantity
1	6003000114423	CLUTCH COVER LC8 CPL.08		1.00
2	60030025000	CLUT.COV. GASK. INSIDE KLI.SIL		1.00
3	6003012614423	CLUTCH OUTSIDE COVER CPL. 06		1.00
4	60030027000	GASKET RING CLUTCH 2X3,1 VAMAC		1.00
5	60030012100	CLOS. COVER OIL SCR. MILLED 03		1.00
6	60030012050	MOLDED RING 1,8X2,5 VAMAC 03		1.00
7	0603082131	COPPER Gask.DIN7603- 8.2X13X1		1.00
8	49030090000	DOWEL 9,8 X 7 X 10	FS-E	2.00
30	0025060856	HH COLLAR SCREW M6X85 TX30	ONLY FOR CASE 77230000144	1.00

31	0025060256	HH collar screw M6x25 TX30		6.00
32	0025060306	HH collar screw M6x30 TX30		9.00
33	0025060356	HH collar screw M6x35 TX30		2.00
34	0025060406	HH collar screw M6x40 TX30		1.00
35	0025060606	HH collar screw M6x60 TX30		4.00
36	0025080606	HH COLLAR SCREW M8x60 TX40		1.00