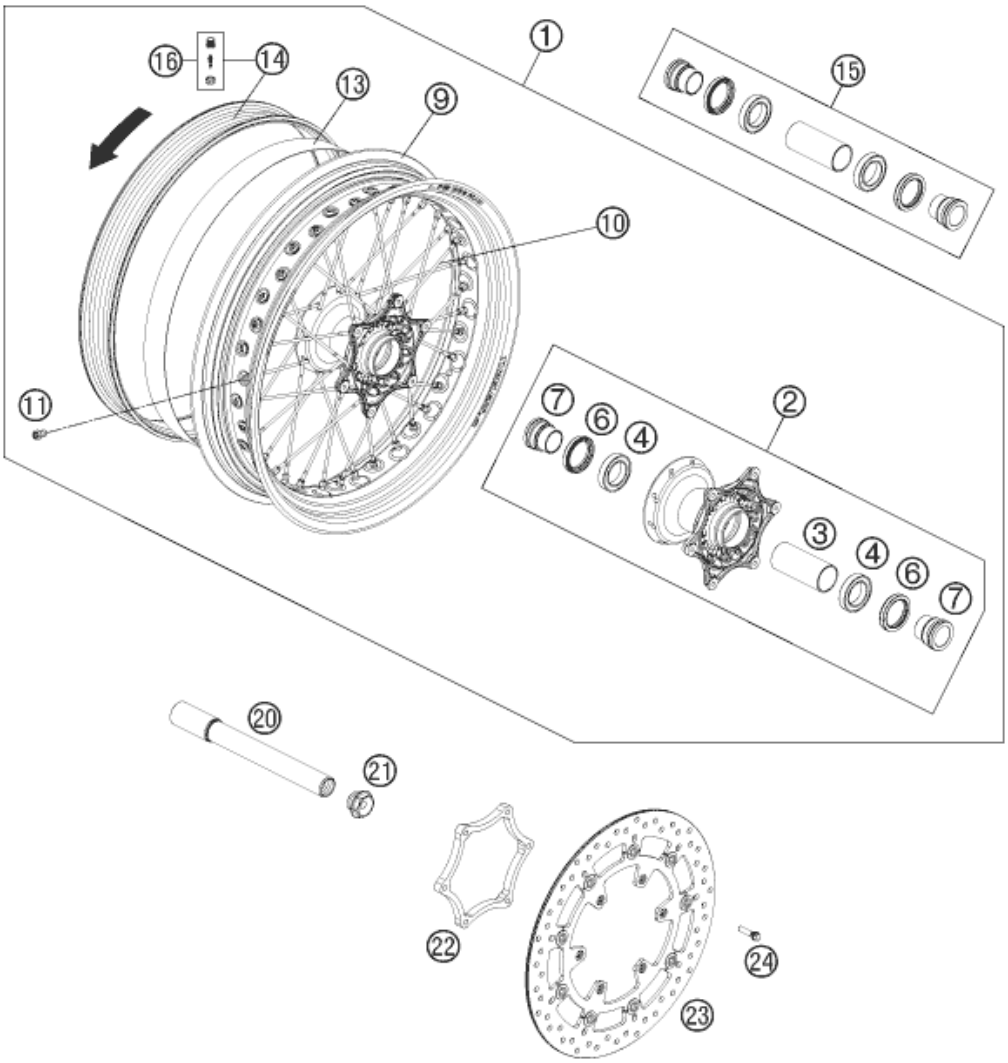

Pos	Part Number	Description	Additional Text	Quantity
1	7500910104430	FR. WHEEL CPL.3,5X17 TUBELESS		1.00
2	75009010044	FRONT HUB CPL. 07		1.00
3	54809011000	BEA.SPACERTUBE 35X2 L=79,4 03		1.00
4	0625069068	Grooved ball bearing 6906		2.00
6	0760354771	Radial shaft seal 35X47X7 TC		2.00
7	75009012000	SPACER BUSHING FRONT WHEEL 07		2.00
9	7500917000030	TL RIM 3,5X17"		1.00
10	75009073170	SPOKE M4.5X170-9G 17" INOX		36.00
11	81210072000	SPOKE NIPPLE QUADRAX M4,5		36.00
13	81209073000	RIM TAPE 17"X3,5"		1.00
14	75009177044	GASKET RUBBER 17" CPL. W.VALV		1.00
15	75009015000	FRONT WHEEL REP. KIT		1.00
16	81210076000	VALVE CPL.		1.00
20	75009081000	WHEEL SPINDLE FRONT D=26MM 07		1.00
21	54809082000	SPINDLE SCREW M24X1,5 WS=27 03		1.00
22	75009061000	BRAKE DISC ADAPTOR 07		1.00
23	75009060000	BRAKE DISC FRONT 320MM 07		1.00
24	59009062023	SPECIAL SCREW M6X23 WS=8 10.9		6.00