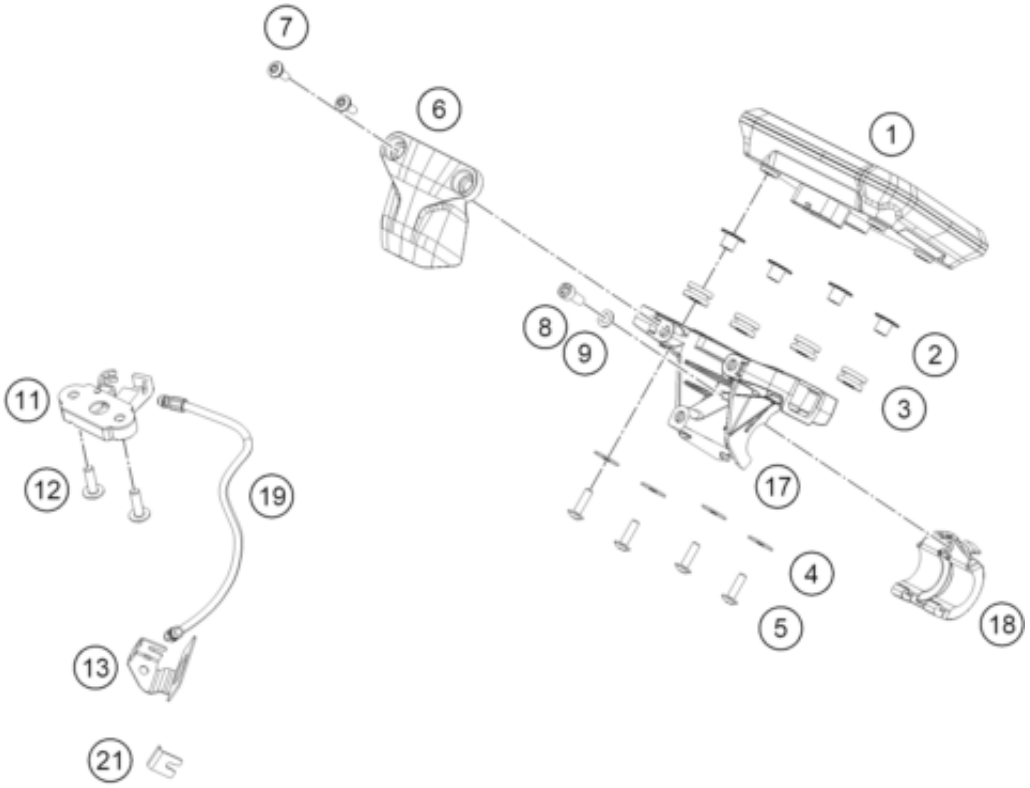

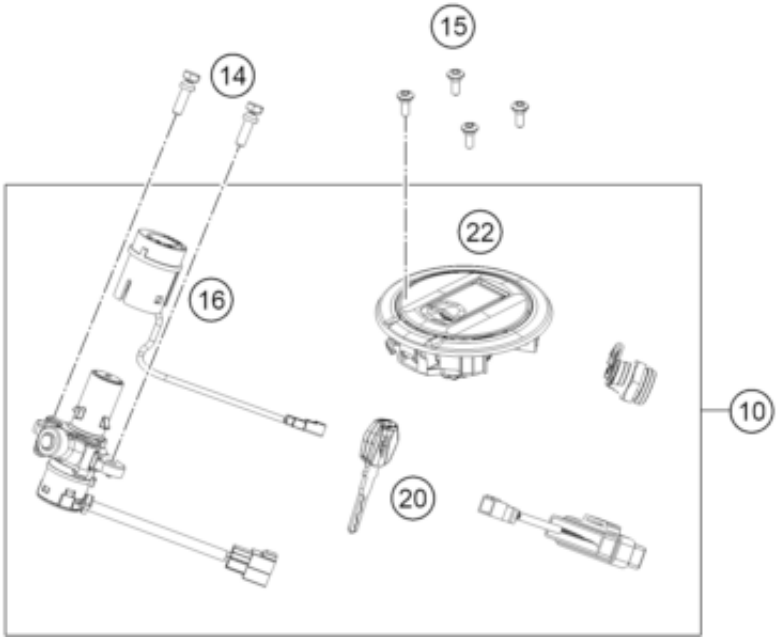

Pos	Part Number	Description	Additional Text	Quantity
1	96314069000	SPEEDOMETER		1.00
2	93014062010	Collar TFT speedo small		4.00
3	90507040001	RUBBER SLEEVE		4.00
4	J690000610000	WASHER PLAIN		4.00
5	J031060183	Roundhead screw M5X18		4.00
6	93114061000	COVER HOLDER HANDLE LOWER		1.00
7	J900000501204	screw button head step M5x0.8		2.00
8	J900000601603	ISK-Schraube M6x16		1.00

9	J690000600100	WASHER PLAIN SMALL-6.5X11.5XT0		1.00
10	96311066044	lock set		1.00
11	90507050000	LOCK ASSY. SEAT		1.00
12	90508006003	AH SCREW M6X1X20		2.00
13	96307051000	seat lock bracket		1.00
14	J9000006020U0	bolt shear M6x1		2.00
15	J900000501404	Linsenkopf-Schraube M5x14		4.00
16	64111066020	ANTENNA		1.00
17	96314060000	holder speedometer lower		1.00
18	96314060010	holder speedometer upper		1.00
19	94507050190	cable latch seat		1.00
20	96312026000	KTM Blank key		1.00
20	96312026010	KTM CUT Key		1.00
21	90107050151	PLATE SEAT LOCK		1.00
22	96307008000	Fuel tank cap		1.00