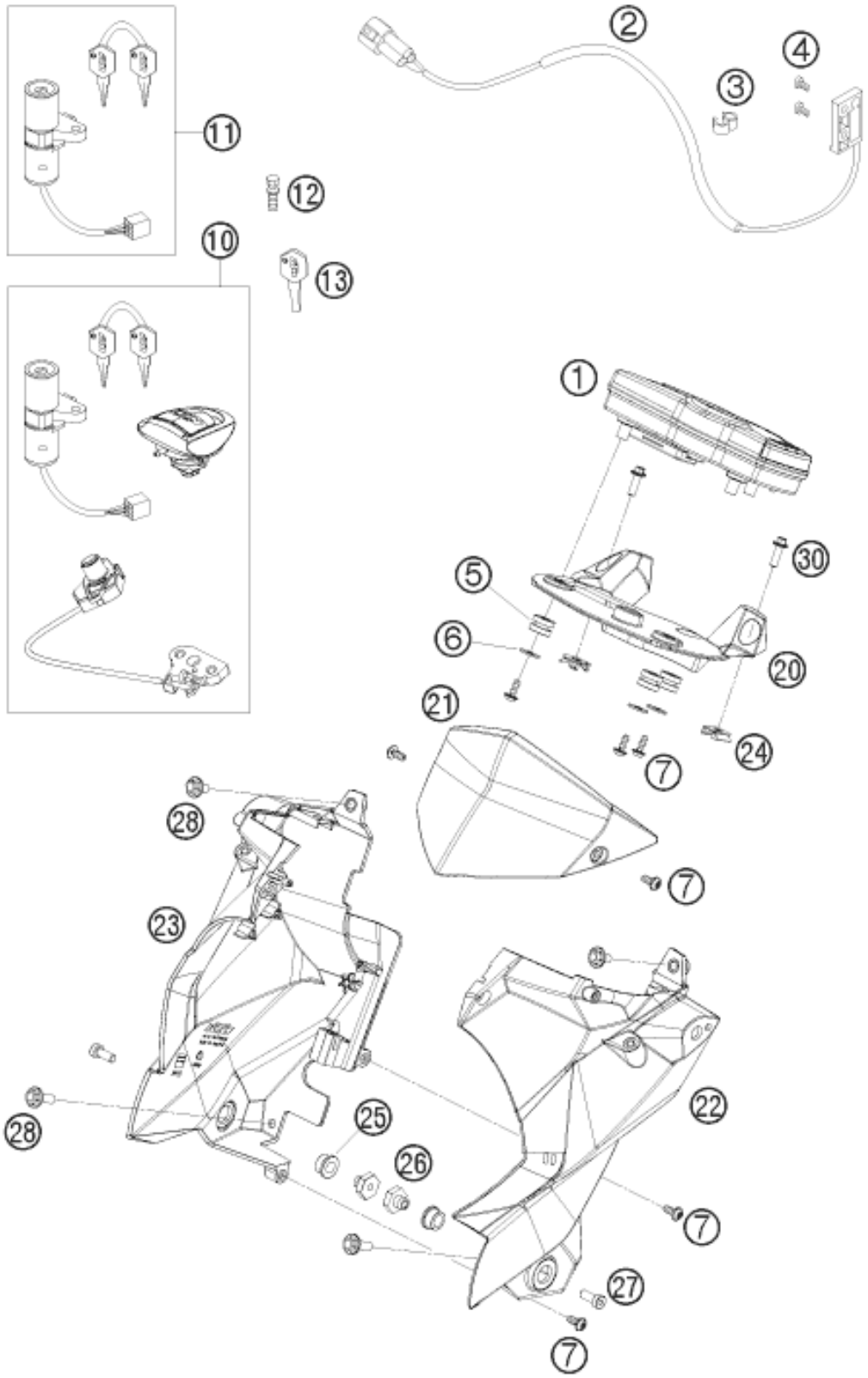

Pos	Part Number	Description	Additional Text	Quantity
1	75014069000	SPEEDOMETER 07	REPROGRAMMABLE KM/H - MPH	1.00
2	62514068100	SPEEDOMETER SENSOR 06		1.00
3	60111094000	CLIP 5/7 MM 06		2.00
4	0084040083	CYL.HEAD SCREW DIN0084-M 4X8 A		2.00
5	58214069051	rubber grommet 16x10.8x3		3.00
6	0021050003	washer DIN 9021 A - 5.3		3.00

7	0081050121	EJOT PT screw K50x12	only for US and SixDays	7.00
10	75011066144	KEY-SET 07		1.00
11	75011166000	IGNITION LOCK		1.00
12	60011064000	TAMPERPROOF SCREW F. IGN. LOCK		2.00
13	40011166100	KEY BLANK LC4/DUKE/LC8		0.00
20	75614060000	SPEEDOMETER BRACKET		1.00
21	75608065000	WINDSHIELD 08		1.00
22	75614062000	MASK BRACKET L/S		1.00
23	75614063000	MASK BRACKET R/S		1.00
24	54603048200	RANGE CHANGE METAL NUT M5		2.00
25	75608006000	Rubber bushing 9X17X8.5		2.00
26	75608006050	THREADED BUSHING M6 SW17		2.00
27	0012060164	AH SCREW DIN6912 M6X16 SL		2.00
28	0024060206	HH collar screw M6x20 TX30		4.00
30	0025050166	HH collar screw M5x16 TX30		2.00