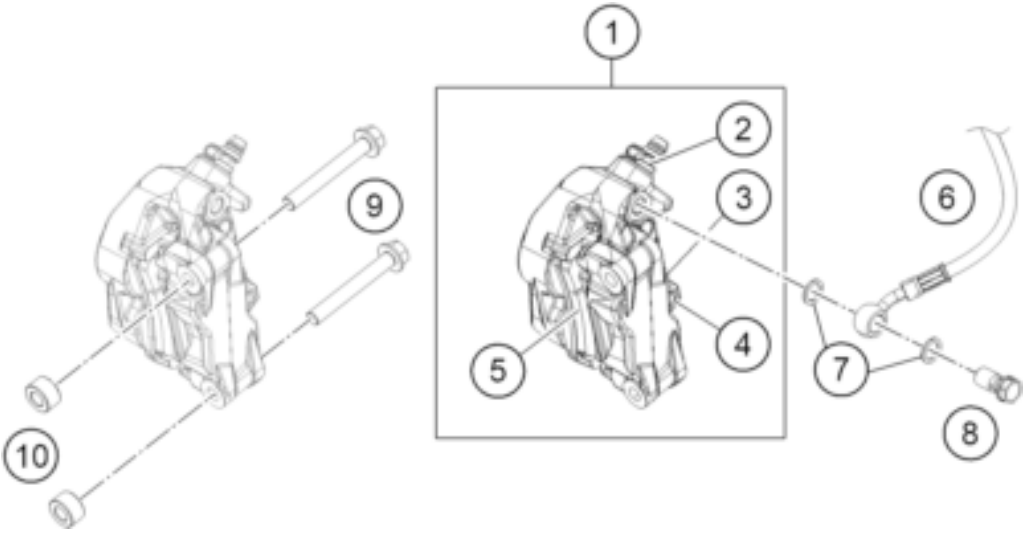

Pos	Part Number	Description	Additional Text	Quantity
1	90113015000	BRAKE CALIPER RADIAL		1.00
2	90113021000	BLEEDER SCREW		1.00
3	90113018000	SPRING CLIP		1.00
4	90113017000	BOLT F. BRAKE PADS		1.00
5	93813030044	KIT FRONT BRAKE PAD WITH SHIM		1.00
6	93013036000	Brake hose		1.00
7	90113026000	COPPER GASKET		2.00
8	90113013000	BANJO SCREW		1.00
9	J01008060S	HH collar screw M8x1x60		2.00
10	90613098150	brake caliper spacer sleeve		2.00