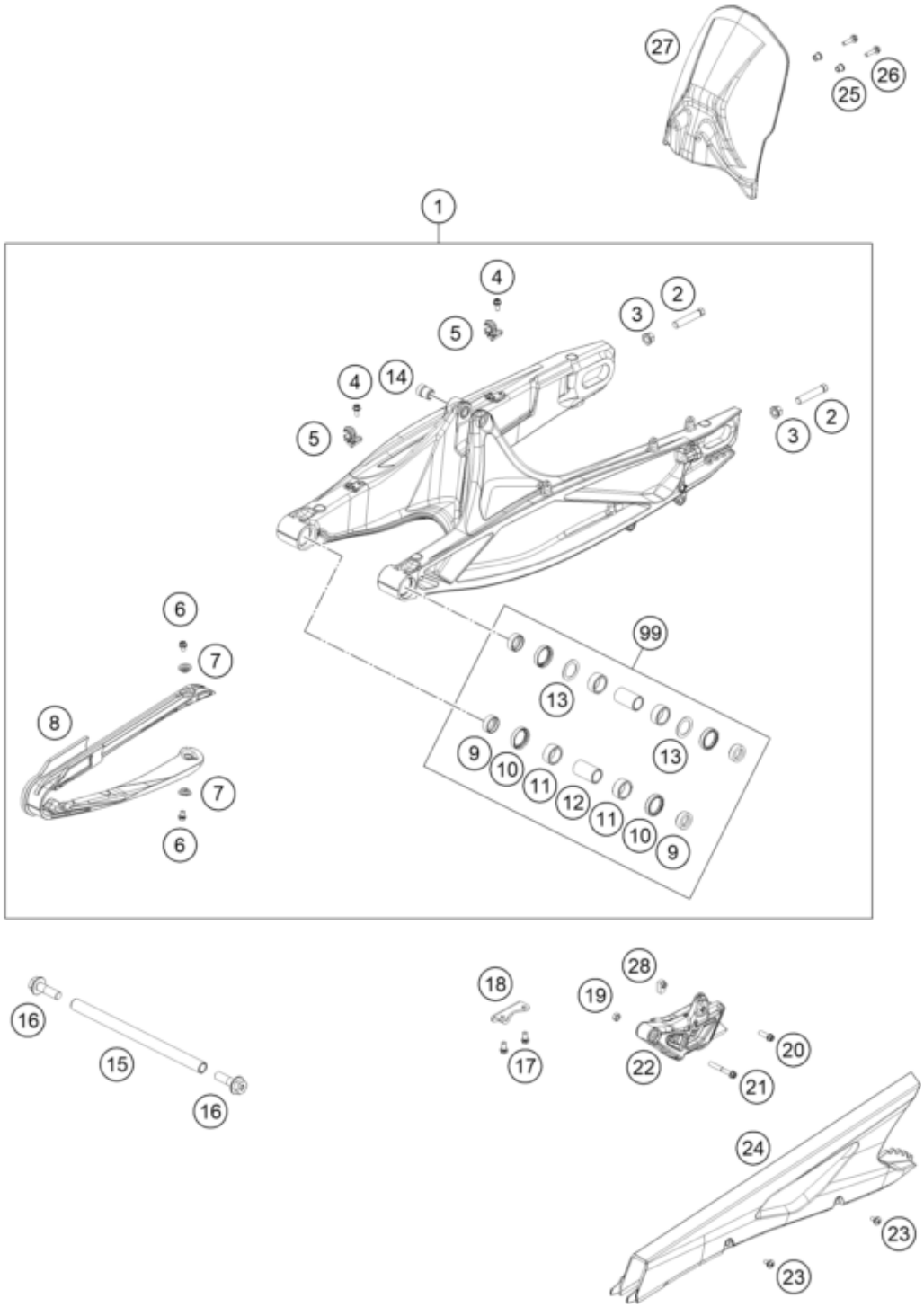

Pos	Part Number	Description	Additional Text	Quantity
1	C63504030044C1	Swingarm cpml. Black		1.00
2	C0910001001000	HH collar nut M10X1,25 WS=13		2.00
3	50304040100	screw M10x1.25x50 WS10		2.00
4	C0000250501200	HH collar screw M5x12 TX30		2.00
5	C90704142000	Brake hose bracket		2.00
6	C0000250501200	HH collar screw M5x12 TX30		2.00
7	C90704066050	Bushing chain slider		2.00
8	C90704066000	chain slide protection		1.00
9	C90704034000	BUCKET F. SHAFT SEAL RING 03		4.00
10	C0760002532000	radial shaft seal 25x32x7		4.00
11	C0430002201200	Needle bushing 22x28x12		4.00

12	C90704032000	BEARING SLEEVE 17X22X38,7 03		2.00
13	C90703036000	Stop disk 22.2x31.7x1		2.00
14	C90704030020	Bushing Shock Mounting		1.00
15	C64104037000	Swing arm bolt		1.00
16	C90704038000	Special screw M12x40 WS19		2.00
17	C0000250601200	HH collar screw M6x12 TX30		2.00
18	C63504030010	Retaining bracket, chain guide		1.00
19	C0009340600502	hexagon nut DIN 934 M6		1.00
20	C0000250602000	HH collar screw M6x20 TX30		1.00
21	C0000250604500	HH COLLAR SCREW M6X45 TX30		1.00
22	78004070100	CHAIN GUIDE CPL.		1.00
23	69008121160	Special screw M5x12		2.00
24	C63504061000	Chainguard		1.00
25	C64104150010	Bushing 5.5x8.3x9		2.00
26	C0000250502000	HH collar screw M5x20 TX30		2.00
27	C63504050000	splash protection swingarm		1.00
28	C77304070030	Insertion nut f chain guide		1.00
99	C90704030010	Swing arm repair kit		1.00