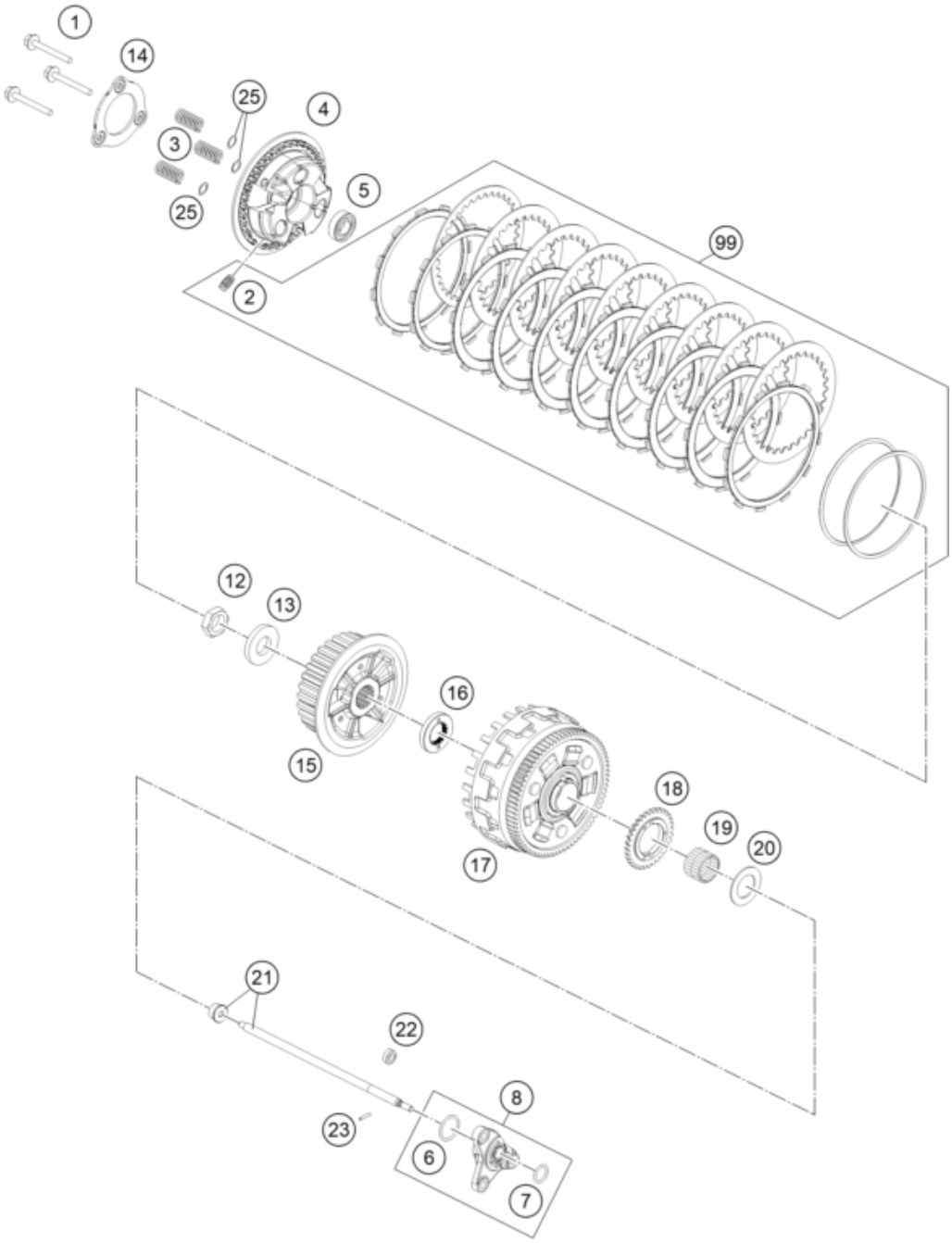

Pos	Part Number	Description	Additional Text	Quantity
1	61332044000	HH collar screw M6X45 WS10		3.00
2	61332007000	DAMPER		3.00
3	61432005000	Clutch spring, orange		3.00
4	61332003000	PRESSURE CAP		1.00
5	0625060033	BALL BEARING 6003 C3		1.00
6	0770020020	O-RING 20X2 VITON		1.00
7	0770001320000	O-Ring 13,0 x 2,0 Viton		2.00
8	T06232054033	Push rod guide cmpl.		1.00
12	0910002200800	hexagonal nut M22x1.5		1.00
13	0252012303500	wedge lock washer M22		1.00
14	61332006000	ARRESTOR PRESSURE CAP		1.00
15	61332002100	Center clutch		1.00
16	60032021000	SECTION WASHER 03		1.00

17	61332001044	CLUTCH CAGE CPL.		1.00
18	60038001132	oil pump gear 32 teeth		1.00
19	0618303526	Needle bushing HK 30X35X26		1.00
20	60032020000	STOP DISK 30,2/50/2		1.00
21	61232154000	Push rod assembly 117mm		1.00
22	0760091862	SHAFT SEAL RING 9X18X06 B-NBR		1.00
23	0402031780	Needle roll.DIN5402 NRB 3X17.8		1.00
25	61332004000	SUPPORT CLUTCH SPRING		3.00
99	A62432011010	Clutch kit		0.00