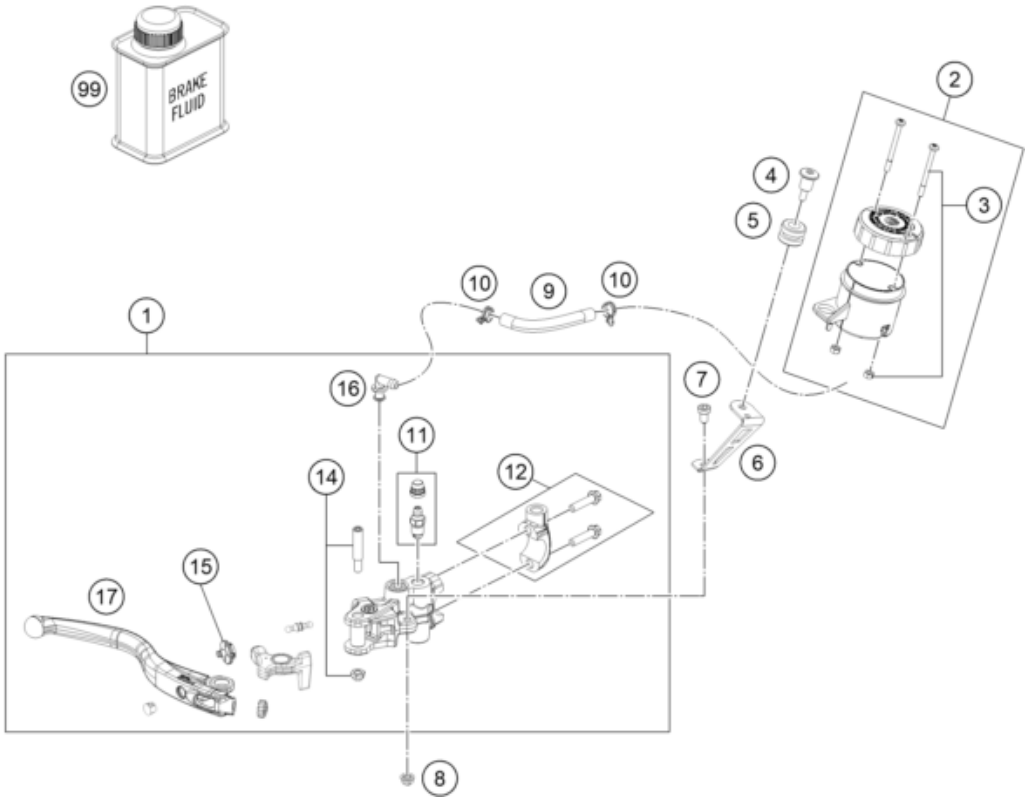

Pos	Part Number	Description	Additional Text	Quantity
1	A62413001000C1	Brake cylinder		1.00
2	61313029100	BRAKE FLUID RESERVOIR		1.00
3	61013009203	SCREW + NUT F. RESERVOIR		1.00
4	61013013050	SCREW RET.PANEL-RESERVOIR		1.00
5	61013013000	RUBBER BUSH 05		1.00
6	A62402055050	Reservoir Bracket		1.00
7	61013021000	SCREW RET.PANEL-BRAKE CYLINDER		1.00
8	61013009004	NUT FOR RESERVOIR		1.00
9	A62402069001	HOSE FOR RESERVOIR		1.00
10	58007017000	YDNAC-clamp 10101 (10.4MM)	300 TPI Erzbergrodeo	2.00
11	60013020000	BLEEDER SCREW WITH CAP		1.00
12	A62413005000	Clamp		1.00
14	61013006000	LEVER SCREW CPL. 05		1.00
15	A62413008000	RUBBER CUP		1.00
16	54513155000	ANGLE PIECE		1.00
17	A62413002000C1	Brake Lever		1.00
99	00062030000	Brake fluid DOT5.1 0,25L		1.00