ACHTUNG !!!
Vor dem Einbau des Vergasers, Bedüsung kontrollieren.
CAUTION !!!
Before mounting the carburetor, check the jetting.

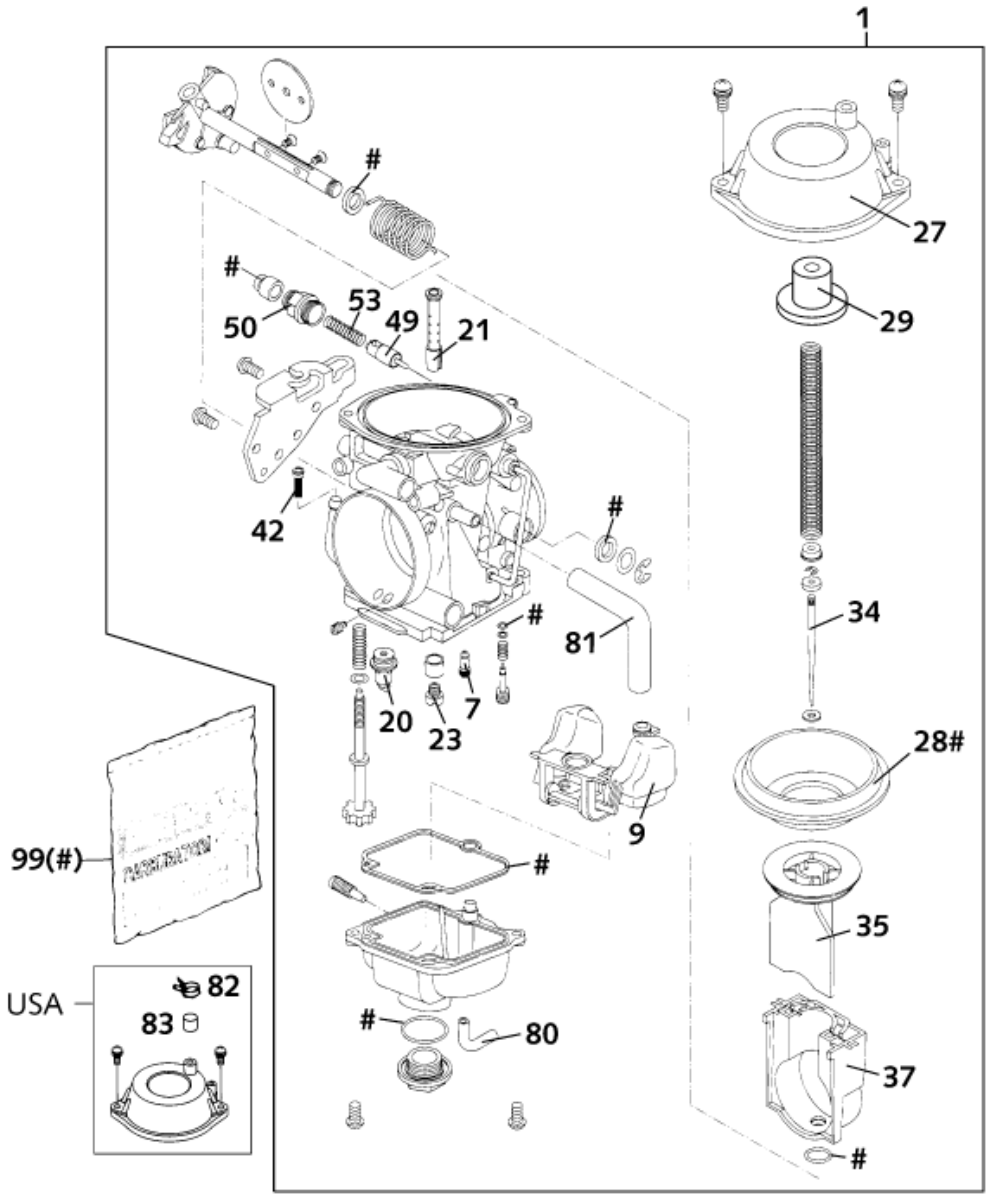

Pos	Part Number	Description	Additional Text	Quantity
1	58431001400	CARBURETOR MIKUNI BST40-22598		1.00
7	58431007045	IDLING JET 45		1.00
9	58431009000	FLOAT 6,1 GRAMM MIKUNI		1.00
20	58431020000	NEEDLE VALVE 2,8MM		1.00
21	58431021689	NEEDLE JET 689 X-6		1.00
23	58431023140	MAIN JET 140		0.00
23	58431023142	MAIN JET 142,5		1.00
23	58431023145	MAIN JET 145		0.00
27	58431027000	DIAPHRAGM COVER MIKUNI		1.00
28	58431028000	DIAPHRAGM FOR THROTTLE VALVE		1.00
29	58331029017	SLIDE STOP L=17MM MIKUNI		0.00

34	584310346G5	JET NEEDLE 6G5		1.00
35	58431035000	THROTTLE VALVE "1"		1.00
37	58431037000	THROTTLE VALVE GUIDE PLASTIC		1.00
42	58431042000	FUEL SCREEN MIKUNI		1.00
49	58431049000	STARTING PISTON MIKUNI		1.00
50	58431050000	SCREW M12 STARTSYSTEMN		1.00
53	58431053000	SPRING 22,5MM FOR START.PISTON		1.00
80	52031137001	PVC-HOSE 3X5MM		0.50
81	54435024001	HOSE ID 7,5 PER METER	FOR 12 LITER TANK	0.50
82	58031005000	CLAMP YDNAC 10128 12MM	FOR 12 LITER TANK	1.00
83	57931001010	PLUG CAP FOR EPC CONNECTION		1.00
99	58431099000	GASKET SET MIKUNI BST40-225		1.00