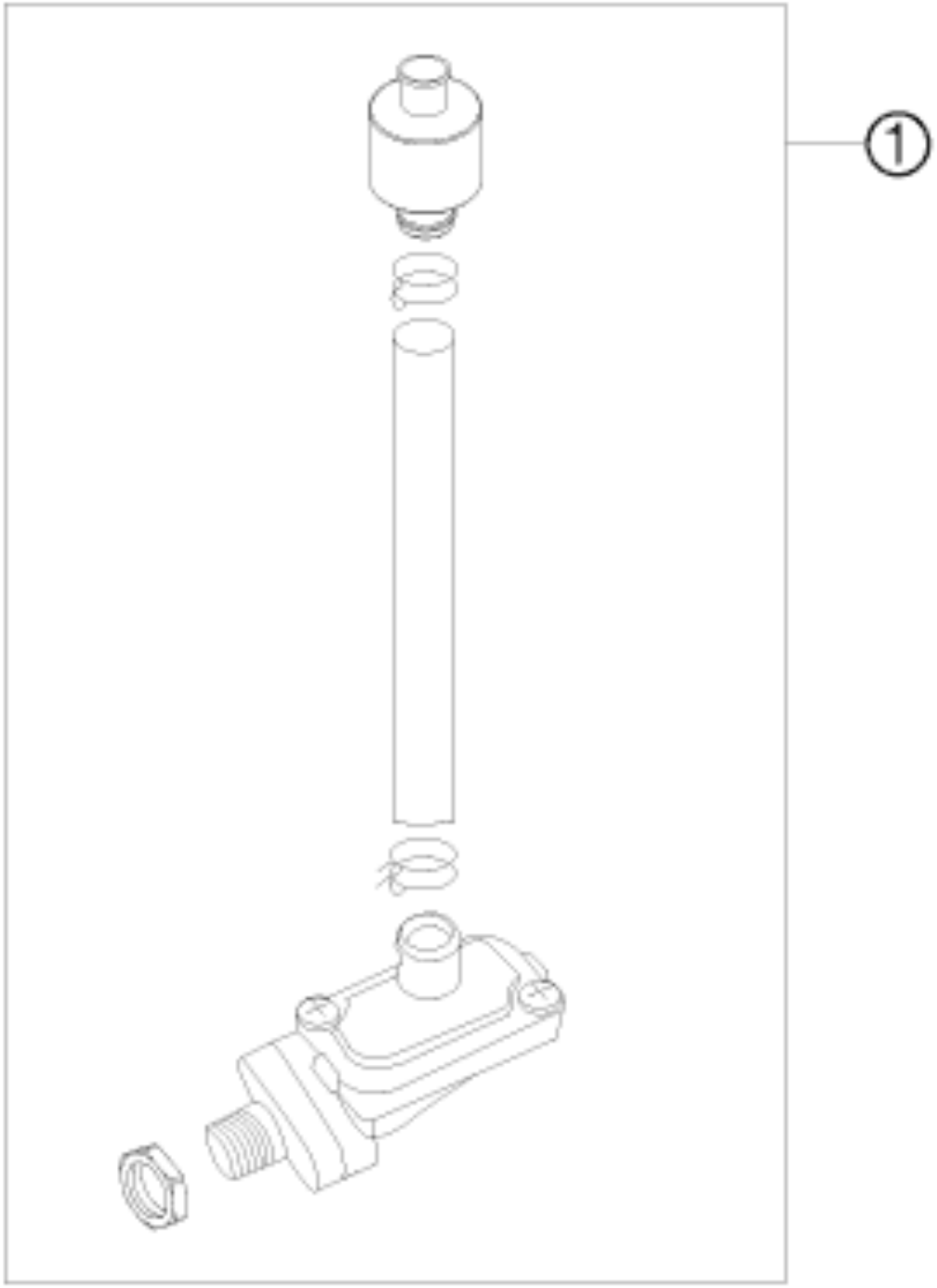

Pos	Part Number	Description	Additional Text	Quantity
1	78005024044	SAS-VALVE CPL. 08	ONLY FOR EU	1.00