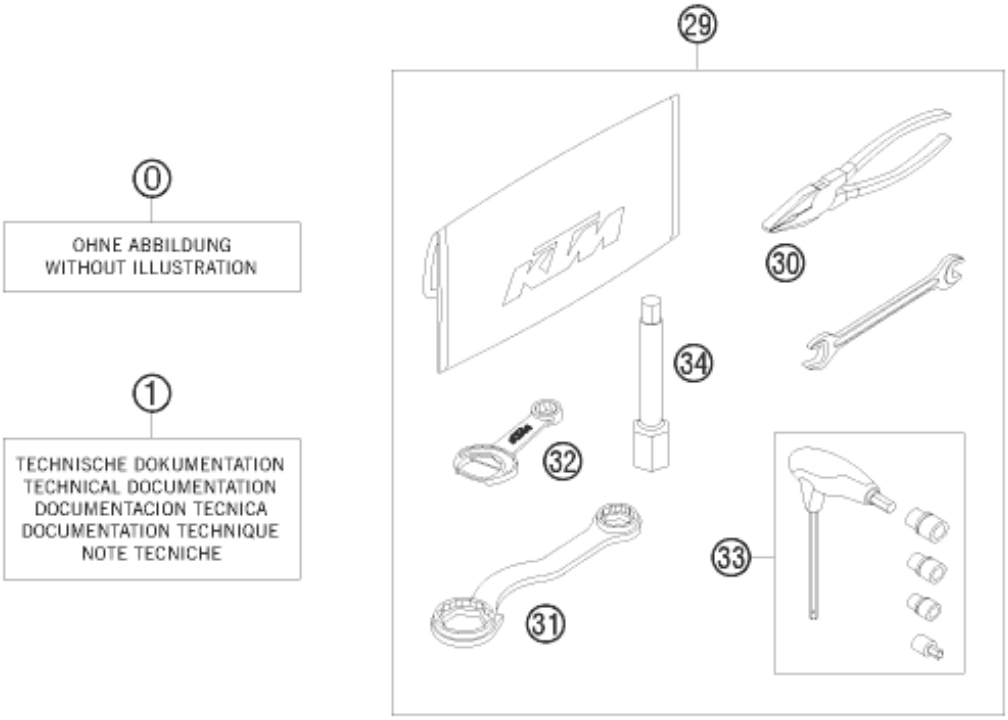

Pos	Part Number	Description	Additional Text	Quantity
0	312305	DOCUMENTS BAG 2006		1.00
0	312313	KTM BALLPOINT PEN ORANGE		1.00
0	3210039	CUSTOMER WELCOME LETTER		1.00
0	78003040033	FOOTREST L/S + R/S CPL. 09		1.00
0	77303094100	PLASTIC FRAME PROTECTION SET		1.00
0	78003190000	SKID PLATE PLASTIC		1.00
0	77202002100	BAR PAD CPL.		1.00
0	SXS08125610	BLEEDER VALVE SET		1.00
0	50313082200	BRAKE PAD RETAINING PIN		1.00
0	54809081060	FRONT AXLE PULL 26MM 04		1.00
0	58511053000	BATTERY 12V 4AH YTX5L-BS		1.00
0	7730801003304A	FRONT FENDER CPL. SIX DAYS 11		1.00
0	77308010099	MOUNTING KIT FRONT FENDER		1.00
0	7700207900004	HAND GUARDS CPL.L/S+R/S OR. 06		1.00
0	00062030019	AIR FILTER OIL 100ML		1.00
1*	3CF8475K2EN	SPM CHASSIS 450XC-W SIX DAYS		1.00
1*	3CM089521KEN	SPM ENGINE 450 EXC EU 2011		1.00
1*	3211601EN	OWN.MAN. 400-530 XC-W/EXC 2011		1.00
29	77029099100	TOOL KIT 07		1.00
30	53012028200	GRIP ORANGE B&F		1.00
31	50329080100	WRENCH SW=17/21/27/32 B&F		1.00
32	50329071100	WRENCH WS=13 B&F + OPENER		1.00
33	60029070200	T-WRENCH WS=6/8/10 TX=45 B&F		1.00
34	78029072000	Spark plug wrench		1.00

* = New part