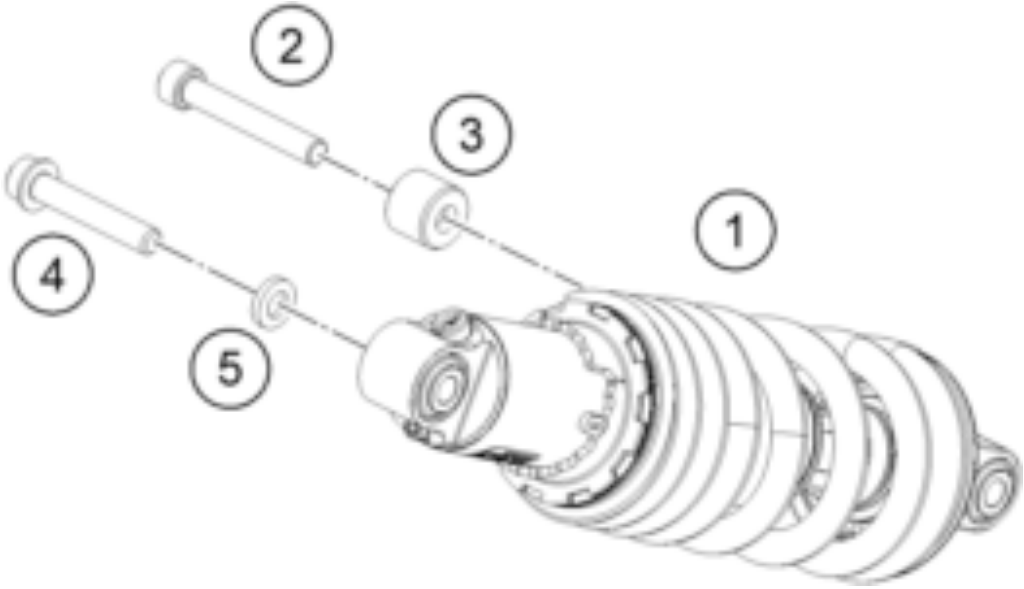

Pos	Part Number	Description	Additional Text	Quantity
1	96004010033	rear shock		1.00
2	J900001006501	Hexagon socket M10x65		1.00
3	J800001801900	BUSH		1.00
4	J900001005800	bolt socket M10x1.25		1.00
5	J690001100200	washer plain		1.00