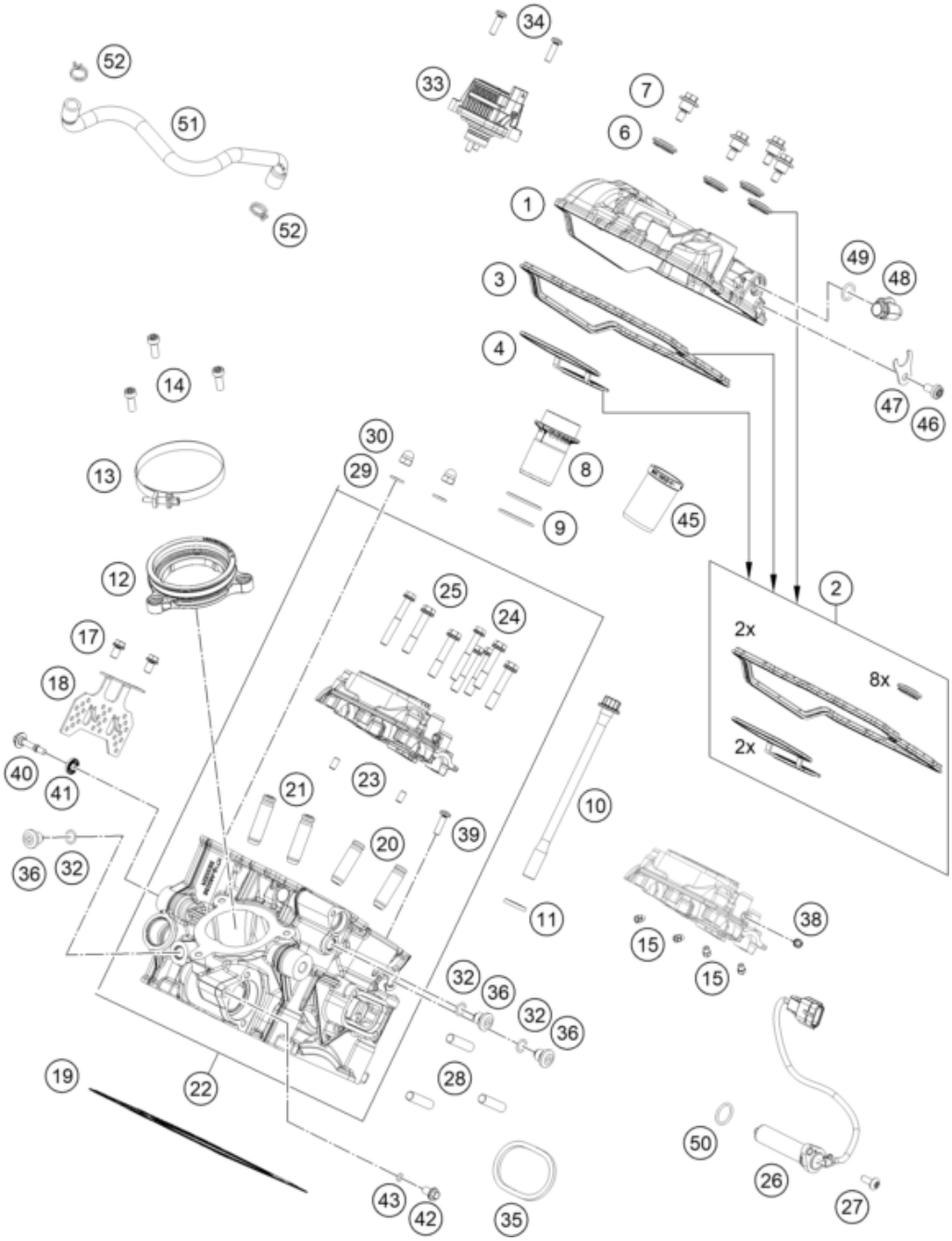

Pos	Part Number	Description	Additional Text	Quantity
1	A60036152000C1	Valve cover rear		1.00
2	A62436099044	VALVE COVER GASKET SET		1.00
3	A60036053000	Valve cover seal		1.00
4	A60036075050	Spark plug shaft seal		1.00
6	77036054250	Sealing element		4.00
7	77336054150	VALVE COVER SCREW		4.00
8	A60036075000	Spark plug shaft inser		1.00
9	0770298178	O-RING 29,87X1,78 VITON		2.00
10	61236079000	CYLINDER HEAD SCREW 08		4.00
11	61236079050	WASHER 11,1X20X3 08		4.00
12	A60036044000	Intake sleeve		1.00
13	61336048000	HOSE CLAMP GEMI 75		1.00
14	014580060166S	SHCS ISO 14580 M6x16 SL		3.00

15	60030063050	oil jet 50 M5		4.00
17	0025060106S	Hex collar screw M6x10 ISA30 S		2.00
18	A60036055000	Lock washer		1.00
19	A60030036075	Cylinder head gasket		1.00
19	A60030036085	Cylinder head gasket		0.00
19	A60030036095	Cylinder head gasket		0.00
20	61236026001	VALVE GUIDE EXHAUST 08		2.00
21	61236025001	VALVE GIUDE INTAKE 6MM		2.00
22	A6003632004424	Rear cylinder head		1.00
23	0402050980	needle roller DIN 5402 5x9.8		2.00
24	0000150703800	Collar screw M7x1x38		6.00
25	0025060456	HH COLLAR SCREW M6X45 TX30		2.00
26	A60036085000	Sliding piece position sensor		1.00
27	58605083014	Oval head screw M5x14 TX25	only for "R"	1.00
28	0835080165	STUD M 8X16 10.9		3.00
29	0125060003	WASHER DIN0125-A 6,4		2.00
30	61230045000	CAP NUT M6 STAINLESS STEEL		2.00
32	0770090015	O-RING 9X1,5 NBR		3.00
33	A60036084000	Double pin actuator		1.00
34	0145830501800	Flat-head screw ISO 14583-M5x1		2.00
35	69005005100	EXHAUST PIPE FLANGE GASKET		1.00
36	77336056095	SCREW PLUG		3.00
38	59030296000	SCREW PLUG		1.00
39	0145830501800	Flat-head screw ISO 14583-M5x1		1.00
40	75036055000	valve mechanism cover screw		1.00
41	75036052010	decoupling element		1.00
42	59036006090	VENT SCREW M6X10 CPL.		1.00
43	0770050012	O-RING 5,0X1,2 NBR 70		1.00
45	61336074100	INSERT SPARK-PLUG SHAFT		1.00
46	0080060123	EJOT ALtracs 60x12 TX30		1.00
47	61236082150	connecting angle retaining pla		1.00
48	61236082200	Elbow fitting		1.00
49	0770120020	O-RING 12,00X2,00 NBR 70		1.00
50	0770160021	O-ring 16x2 Viton 75		1.00
51	A62430087000	Engine vent hose		1.00
52	60306082000	CLAMP YDNAC 10173 (19MM)		2.00