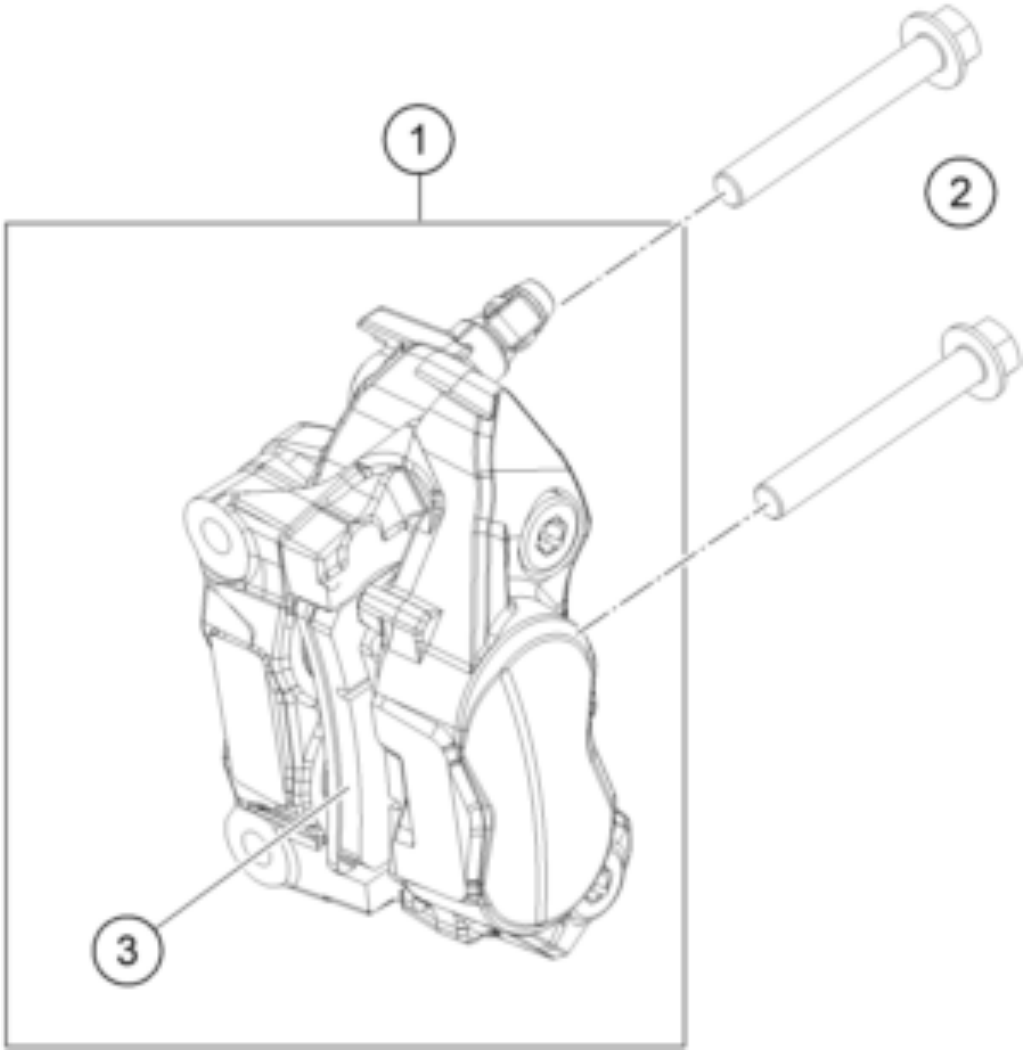

Pos	Part Number	Description	Additional Text	Quantity
1	96213016000	CALIPER ASSEMBLY FRONT		1.00
2	J01008060S	HH collar screw M8x1x60		2.00
3	96213030000	KIT FR BRAKE PAD		1.00