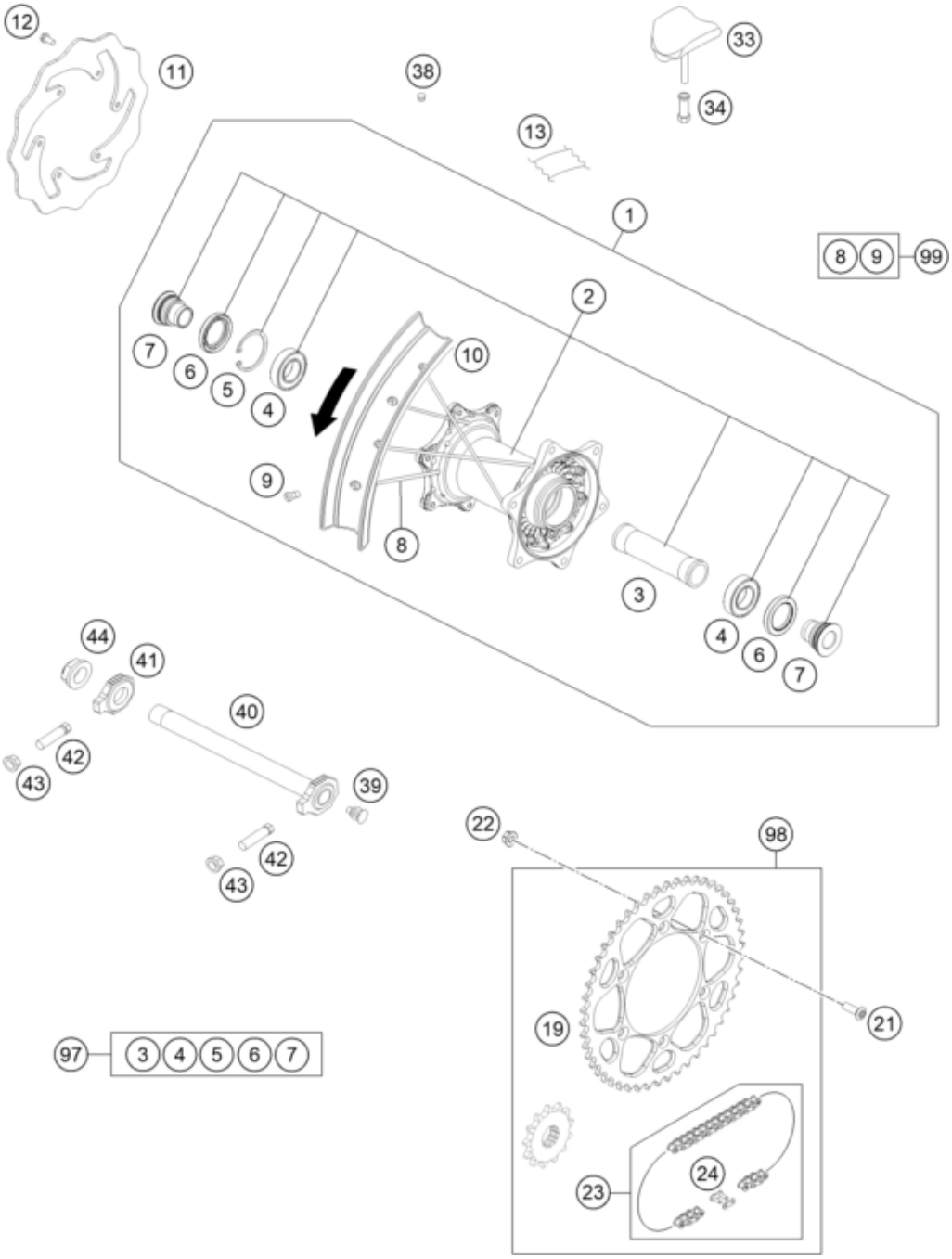

Pos	Part Number	Description	Additional Text	Quantity
1	A49010001044C1	Rear wheel cmpl. 2.15x18# Gian		1.00
2	A46010010044	Rear wheel hub cmpl.		1.00
3	A46010011000	Bearing spacer tube 121.5mm		1.00
4	0625060058	Grooved ball bear.6005 DDU2CG2		2.00
5	0472047175	CIRCLIP DIN0472-47X1,75		1.00
6	0760354771	Radial shaft seal 35X47X7 TC		2.00
7	A46010016000	Spacing tube rear wheel		2.00
8	7901007119330	SPOKE M4,5X193-18" BLACK 1		36.00
9	77109072000	Spoke nipple M4.5 AL		36.00
10	7811007000030	RIM REAR 2,15X18" BLACK		1.00
11	79010060000	BRAKE DISC REAR 220MM 16		1.00
12	59009062013	SPECIAL SCREW M6X13 WS=8 10.9		6.00
13	50310073200	Tube protector 18" and 19"		1.00

19	7771015104530	SPROCKET 45-T BLACK		1.00
19	7771015104630	Rear sprocket 46 Z		0.00
19	7771015104730	Rear sprocket 47Z		0.00
19	7771015104830	SPROCKET 48-T BLACK		0.00
19	7771015104930	Sprocket 49-t		0.00
19	7771015105030	Rear sprocket 50-t, black		0.00
19	7771015105130	Rear sprocket 51-t		0.00
19	7771015105230	Rear sprocket 52-t, black		0.00
21	0019080266S	COUNTER-SUNK SCREW ISA45 M8X26	ONLY FOR 78003023081	6.00
22	06923080003	Hex. nut DIN EN 1661 M8 WS13		6.00
23	78010267118	CHAIN DID 118 LINKS		1.00
24	78010266000	CONNECTING LINK F. 78010267118		1.00
33	78110090200	Tyre locker 2,15"		1.00
34	77110090050	NUT FOR WHEEL HOLDER		1.00
38	55003135000	PLUG FOR RIM		0.00
39	50210086000	Plug SFL16		0.00
40	A46010085044	Wheel spindle rear wheel cmpl.		1.00
41	A46010084000	Chain tension adjuster right		1.00
42	50304040100	screw M10x1.25x50 WS10		2.00
43	58414030000	HH COLLAR NUT M10X1,25 WS=13	MINI ADV.	2.00
44	A46010086000	Collar nut M22x1.5 WS=30		1.00
97	A46010015010	wheel bearing repair kit		0.00
98	00050002053	DRIVETRAIN KIT Enduro 13T/45T		0.00
99	00050000981	SPOKE KIT REAR 18" EXC 17		0.00