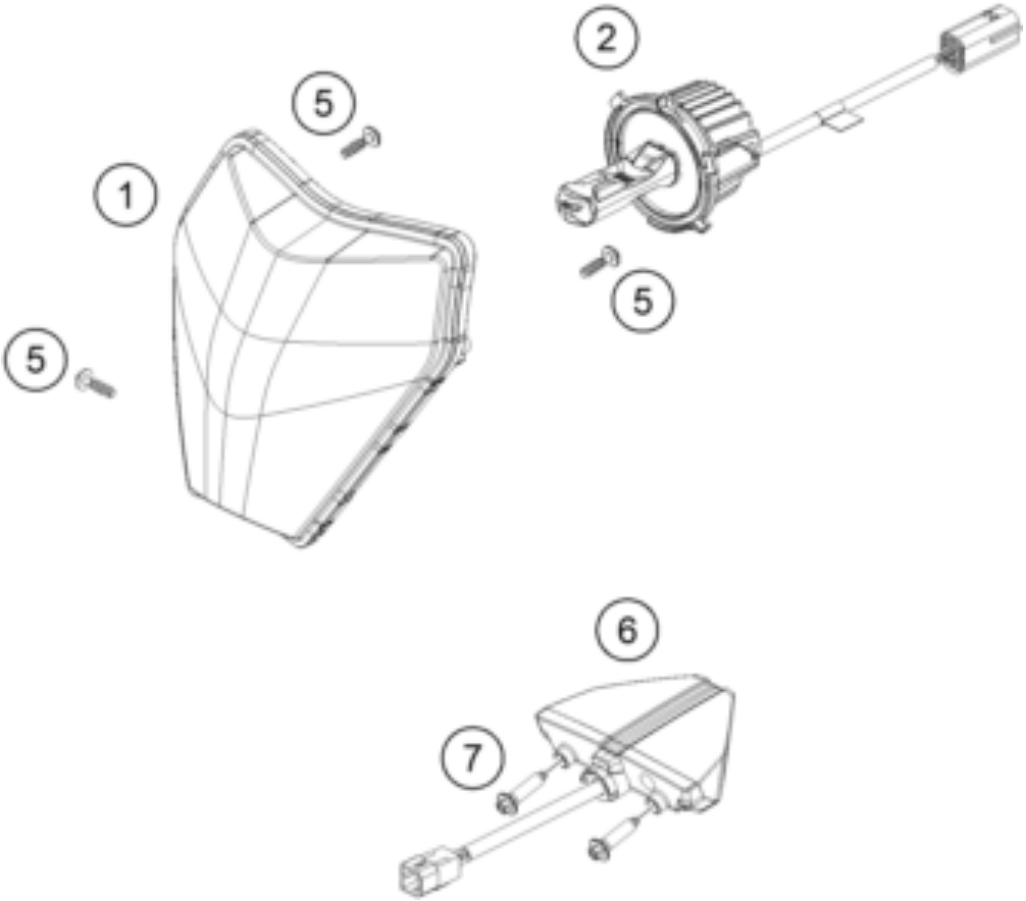


| Pos | Part Number | Description | Additional Text | Quantity |
|---|---|---|---|---|
| 1 | A49014001080 | Headlamp KTM | | 1.00 |
| 2 | A49014002000 | LED-Unit | | 1.00 |
| 5 | 0081050181 | SCREW FOR PLASTIC K50X18 T20 | 300 TPI Erzbergrodeo | 3.00 |
| 6 | 79714040000 | Tail light | | 1.00 |
| 7 | 0017060255 | EJOT PT SCREW K60X25-Z SW6 | | 2.00 |