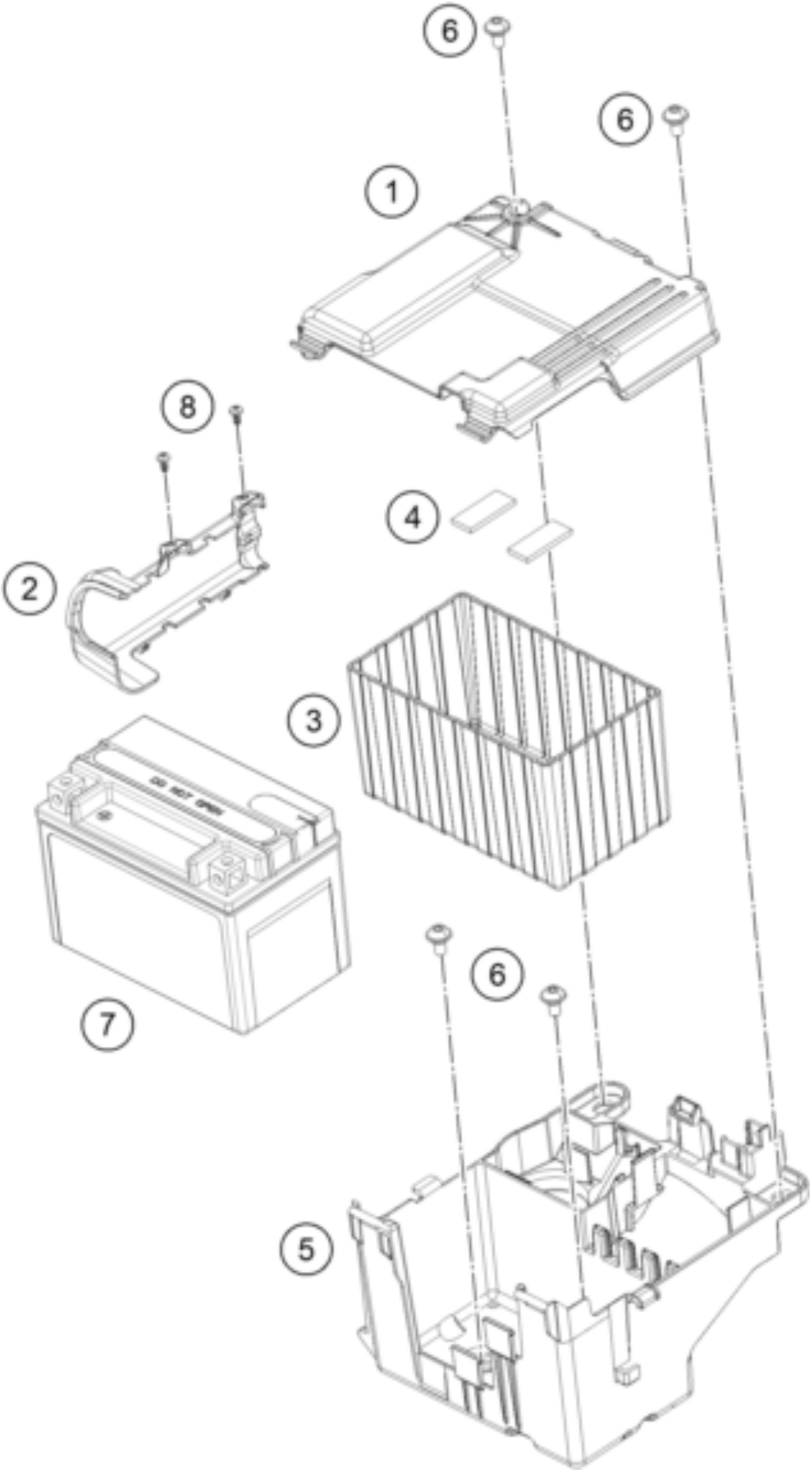

Pos	Part Number	Description	Additional Text	Quantity
1	96311055000	COVER CASE BATTERY		1.00

2	96311052010	main wiring harness cable chan		1.00
3	96311054010	battery rubber holder		1.00
4	90611155000	FOAM BATTERY BKT 35X15X3		2.00
5	96311054000	CASE BATTERY		1.00
6	J900000601203	Linsenkopf-Schraube M6x20		4.00
7	90611053000	BATTERY 12V/8AH		1.00
8	J900000401000	Kunststoffschraube 3,5x10		2.00