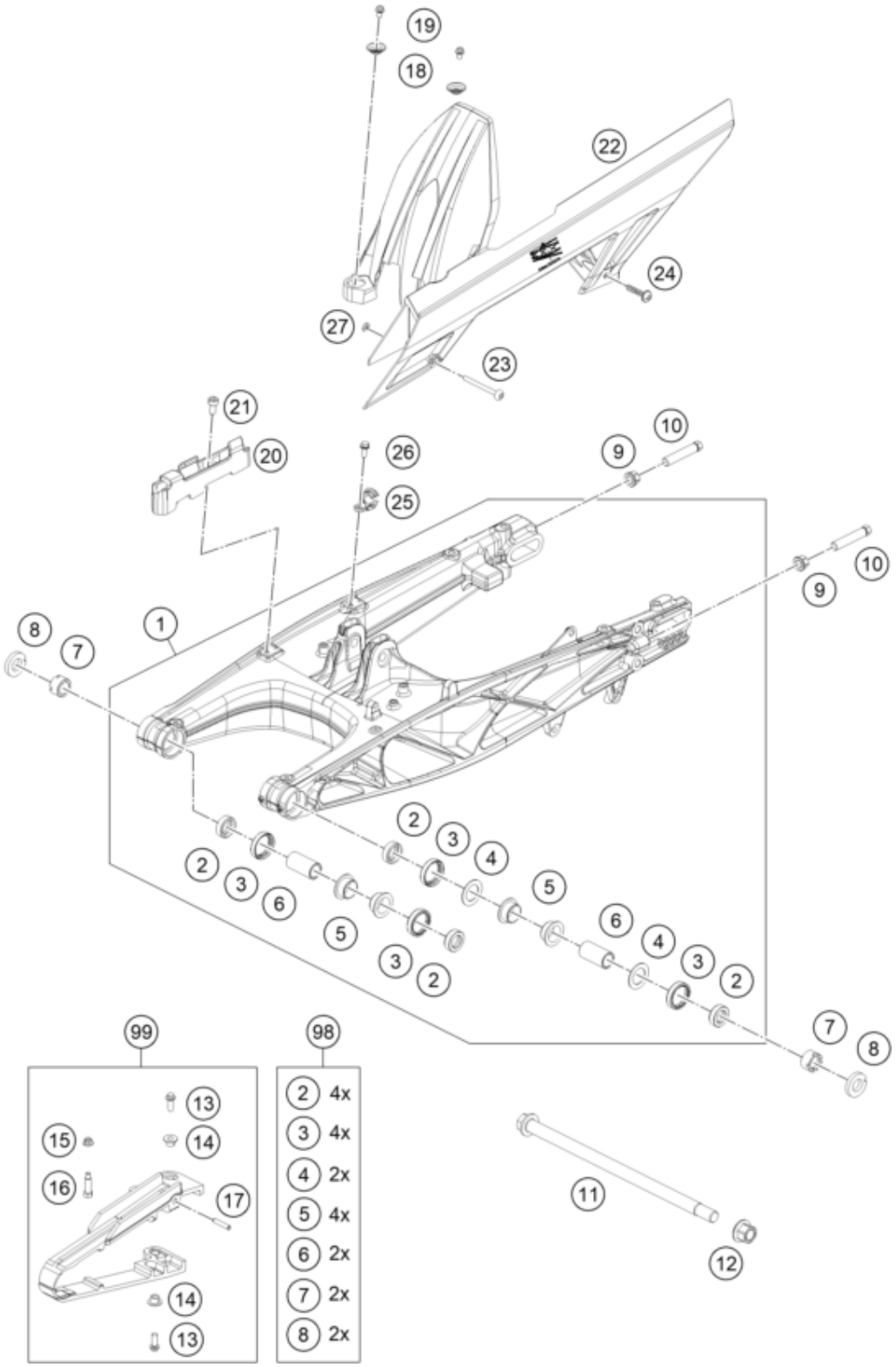

Pos	Part Number	Description	Additional Text	Quantity
1	95804030044	ADV 390 SWING ARM ASSLY	36xxx	1.00
2	90104034000	cup for radial shaft seal		4.00
3	90104034001	OIL SEAL RING 25X32X7		4.00
4	90104036000	Thrust washer 22.2x31.7x1		2.00
5	90104031000	Igus plain bearing		4.00
6	90104032000	sleeve bushing 15.1x20x38		2.00
7	90104046000	swingarm adjusting ring		2.00
8	93004042000	Special wahser		2.00

9	90104010002	flanged hex nut M10x1.25 WS13		2.00
10	90104040000	BOLT HEX M10X1.25X50 WS10		2.00
11	90104037000	Shaft swing arm L=299mm		1.00
12	90104038000	FLANGED NUT M14X1.5		1.00
13	J025060169	HH COLLAR SCREW M6X16 SW8		2.00
14	90604062000	chain slider bushing		2.00
15	J06923050053	Hex collar nut, M5		1.00
16	90104040100	screw M5x0.8x30		1.00
17	90904070020	SLEEVE CHAIN GUARD		1.00
18	93004051000	Supporting shell		2.00
19	J025060081	Hex collar screw M6X8		2.00
20	94513047000	clamp hose		1.00
21	J912050102	bolt soket-m5x0.8xl10xcl10.9xb		1.00
22	93004060100	Chain cover		1.00
23	93004065000	hexagon socket screw M5X0.8X55		1.00
24	93004064000	Plastic screw 6x30		1.00
25	94513047010	clamp hose		1.00
26	J011050133	HH COLLAR SCREW M5X13 SW8		1.00
27	90504067000	WASHER CHAIN SLIDING GUARD		1.00
98	90104230010	SWINGARM REP. KIT 11-17		0.00
99	90104066210	CHAIN GUARD KIT 250/390		0.00