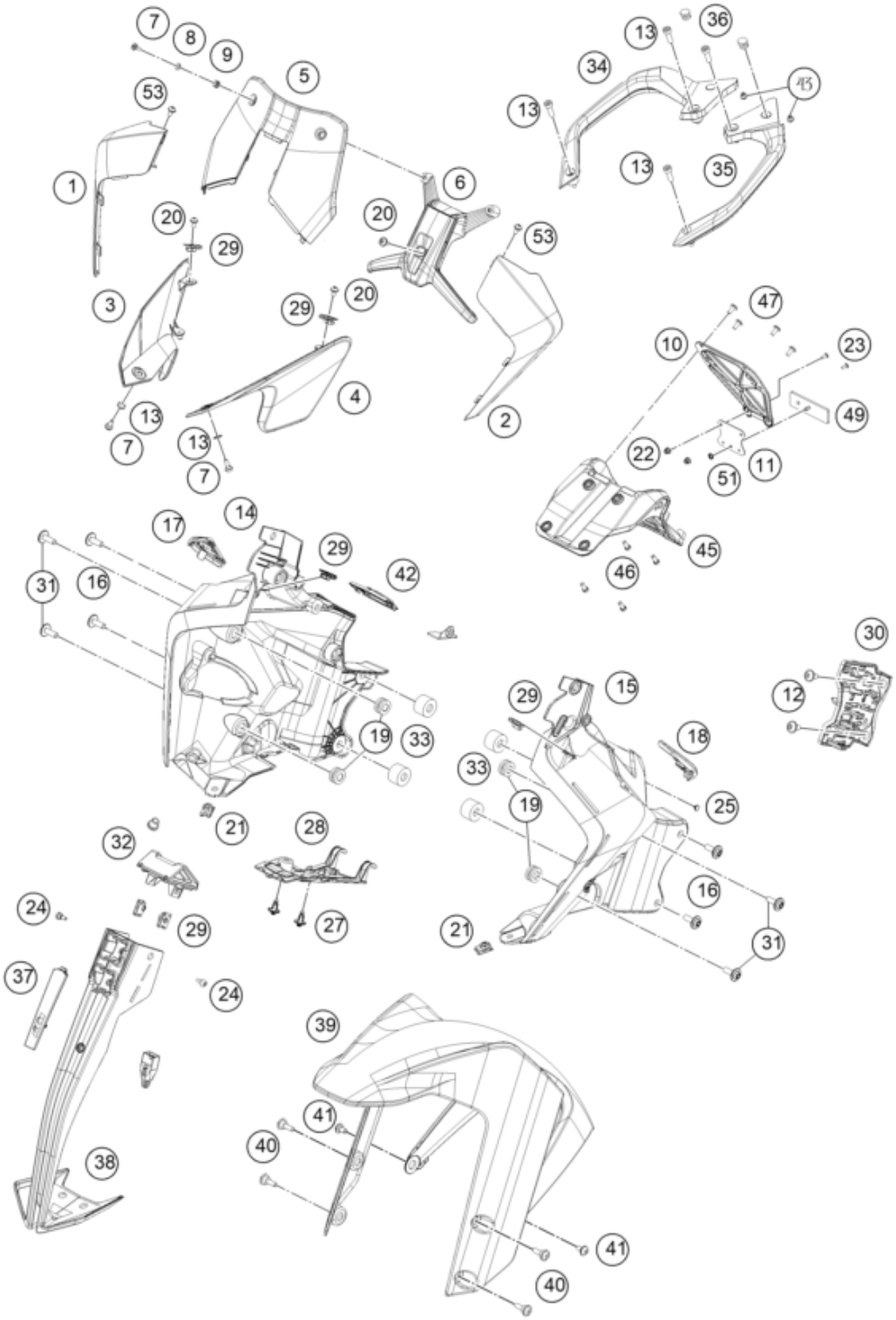

Pos	Part Number	Description	Additional Text	Quantity
1	95808001020	headlight mask right		1.00
2	95808001010	Headlight mask, left		1.00
3	95808104000	FLAP LAMP HEAD RH		1.00
4	95808103000	FLAP LAMP HEAD LH		1.00
5	95808108000	Windshield R EU		1.00
6	95808008050	Windshield holder		1.00
7	J031060183	Roundhead screw M5X18		2.00
8	93014062010	Collar TFT speedo small		2.00
9	90507040001	RUBBER SLEEVE		2.00

10	95812181000	Reflector holder		1.00
11	90514044000	REFLECTOR MOUNTING		1.00
12	93008020060	Screw M6X1X9		6.00
13	J912080306	Bolt soket-M8X1.25XL30XBLXPREC		4.00
14	95814011000	Mask support, right		1.00
15	95814010000	Maskcarrier left		1.00
16	95814013020	screw button head-m6x1xl 16xst		4.00
17	95814011080	Connector cover, right		1.00
18	95814010080	Connector cover, left		1.00
19	93014017000	Rubber bushing		4.00
20	J031050101	screw butn hd-m5x0.8xl10xblkxs		5.00
21	93008084010	Range change metal nut M6		2.00
22	90102031010	HEX NUT M5 AF8		2.00
23	J005050123	FLAT HEAD SCREW M5X12 PH		2.00
24	95814013010	Oval head screw M5x10		2.00
25	J650001000200	Plug		1.00
27	93814050000	RIVET		2.00
28	95814010020	Cable cover, mask support		1.00
29	93008083010	Clip Nut M5		6.00
30	95811048000	Front connector support		1.00
31	J031060101	screw butn hd-m6x1xl10xblkxste		4.00
32	95814011020	Cover mask support		1.00
33	95803001088	Bushing		4.00
34	95812009000	Holding bracket, right		1.00
35	95812008000	Holding bracket, left		1.00
36	95812008030	Cover		2.00
37	95814012010	Headlight mask cover		1.00
38	9581401200056	ADV390 COVR MASK MIDDLE GUNMET		1.00
39	95808010000	Front fender		1.00
40	95808010070	Roundhead screw, M6x16		4.00
41	J900000601200	Oval head screw M6x12		2.00
42	95811042050	Cover, 12#V power socket		1.00
43	J650001200500	Rubber buffer		2.00
45	95808015000	numberplate carrier		1.00
46	J900000601601S	Cyl.screw M6x16-8.8		4.00
47	93008037000	Panhead screw M6		4.00
49	90514045000	REFLECTOR		1.00
51	J06923050053	Hex collar nut, M5		1.00
53	J031050136	screw butn hd-m5x0.8xl13xblkxs		2.00
54	J800000600400	Collar bushing 6.2x4x9		2.00