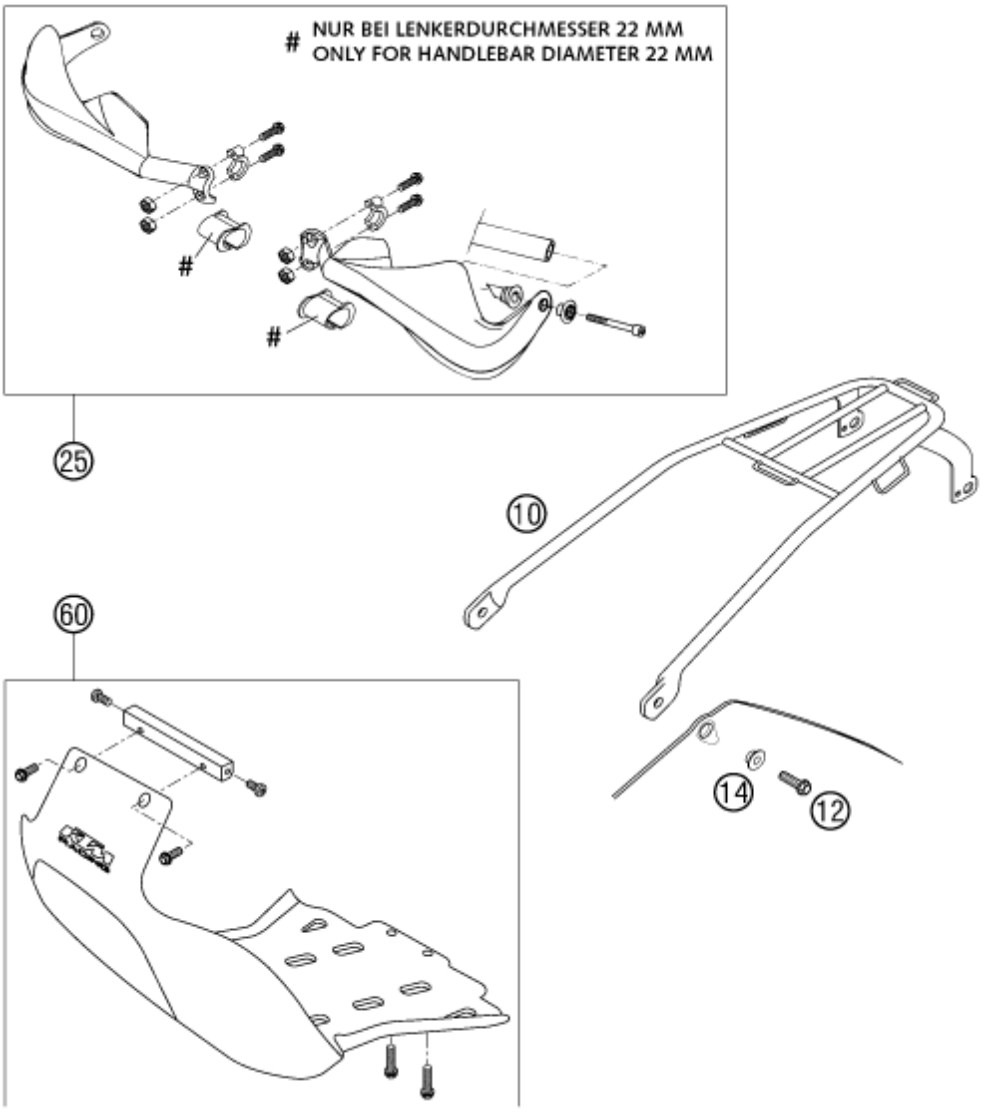

Pos	Part Number	Description	Additional Text	Quantity
10	51212010000	*BAGGAGE CAR.SILV. 125 EXE2000		1.00
12	0015060203	HH COLLAR SCREW M 6X20 WS=8		2.00
14	50308052000	BUSH FOR SPOILER 6X11X16X5 MM		2.00
25*	6000207900030	Handguard left+right cmpl. bla		1.00
60*	59003090200	% ENGINE PROTECTION PLASTIC CP		1.00

* = New part