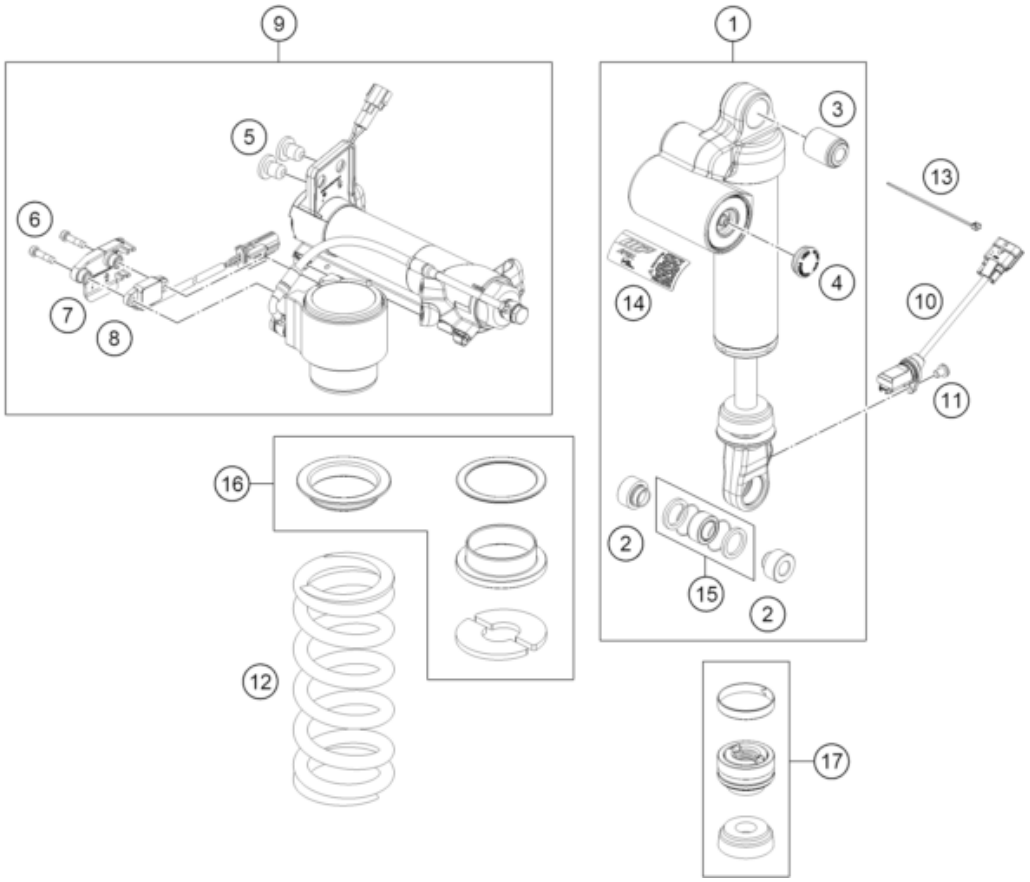

Pos	Part Number	Description	Additional Text	Quantity
1	A624C422X307049	Damper KTM 1390 SD R EVO My24		1.00
2	46181342	Bearing bush 12x15/19/23,5x18,		2.00
3	46181449	Silentblock 12x25x32		1.00
4	46811208	Rubber cap do not open 22x5,5		1.00
5	S92060000000000	Absorber 5x11.5x18		2.00
6	014580050203S	Cap hd. screw DIN14580 M5x20 P		2.00
7	S938100000000C1	PA cover		1.00
8	60000288	sensor linear PA 20mm		1.00
9	11001T03	PA Super Duke R 21 electrical		1.00
10	A62416058000	Travel sensor		1.00
11	00700005	HS flat head screw M6x8 acc dr		1.00
12	91010381	Mainspring (59) 85-195 silence		1.00
13	44011076140	CABLE TIE 140/2,5MM BLACK		1.00
14	52000358	Sticker APEX 60x29		1.00
15	R12012T	Ball joint bearing kit top 12m		0.00
16	RP10031T	Repair kit spring retainer sho		0.00
17	RP10030T	shock absorber repair kit Supe		1.00