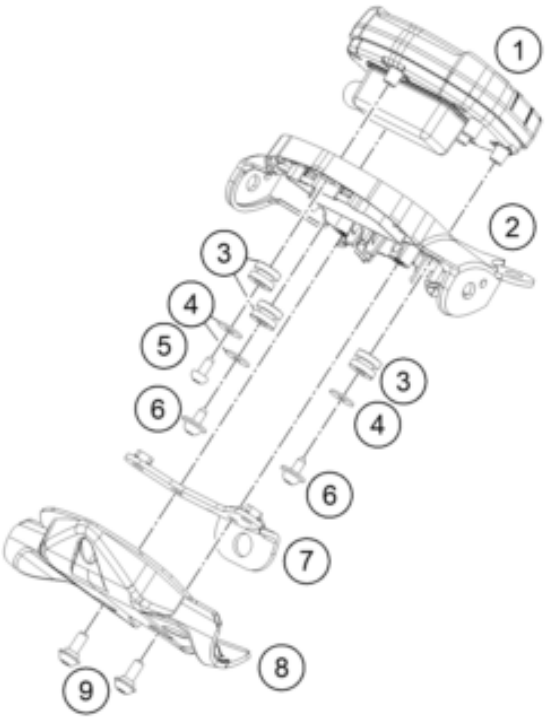

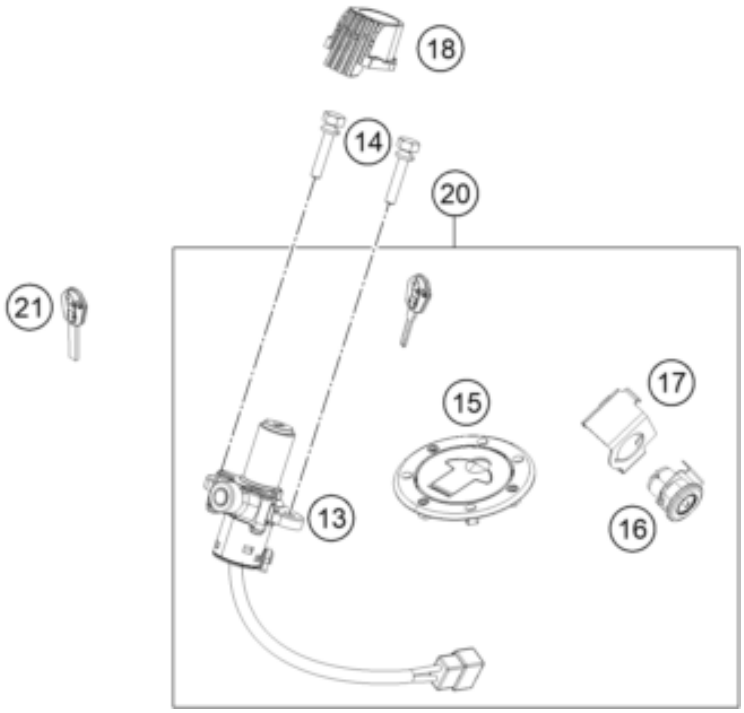

Pos	Part Number	Description	Additional Text	Quantity
1	93214069100	SPEEDOMETER		1.00
2	93014060000	Dasboard support LCD		1.00
3	90114060050	GROMMET DASHBOARD		3.00
4	90114064013	PLAIN WASHER		3.00
5	93114062000	Screw speedometer bracket LCD		1.00
6	J081050121	SELF TAPPING SCREW K50X12 T20		2.00
7	93014063000	Sheet insert LCD support 2		1.00
8	93014061000	Dashboard support rear		1.00
9	93008040000	Screw M6X1X13		2.00

13	93011066044	Ignition lock complete		1.00
14	93011064100	Special screw for ignition loc		2.00
15	93807008000	Fuel tank cap		1.00
16	90107050050	SEAT LOCK		1.00
17	93007051000	Retaining bracket		1.00
18	93011066010	Positioning rubber		1.00
20	90211066144	Lock set cpl.		1.00
21	90111067100	BLANK KEY 125/200 DUKE		0.00
21	90111067000	KEY		1.00