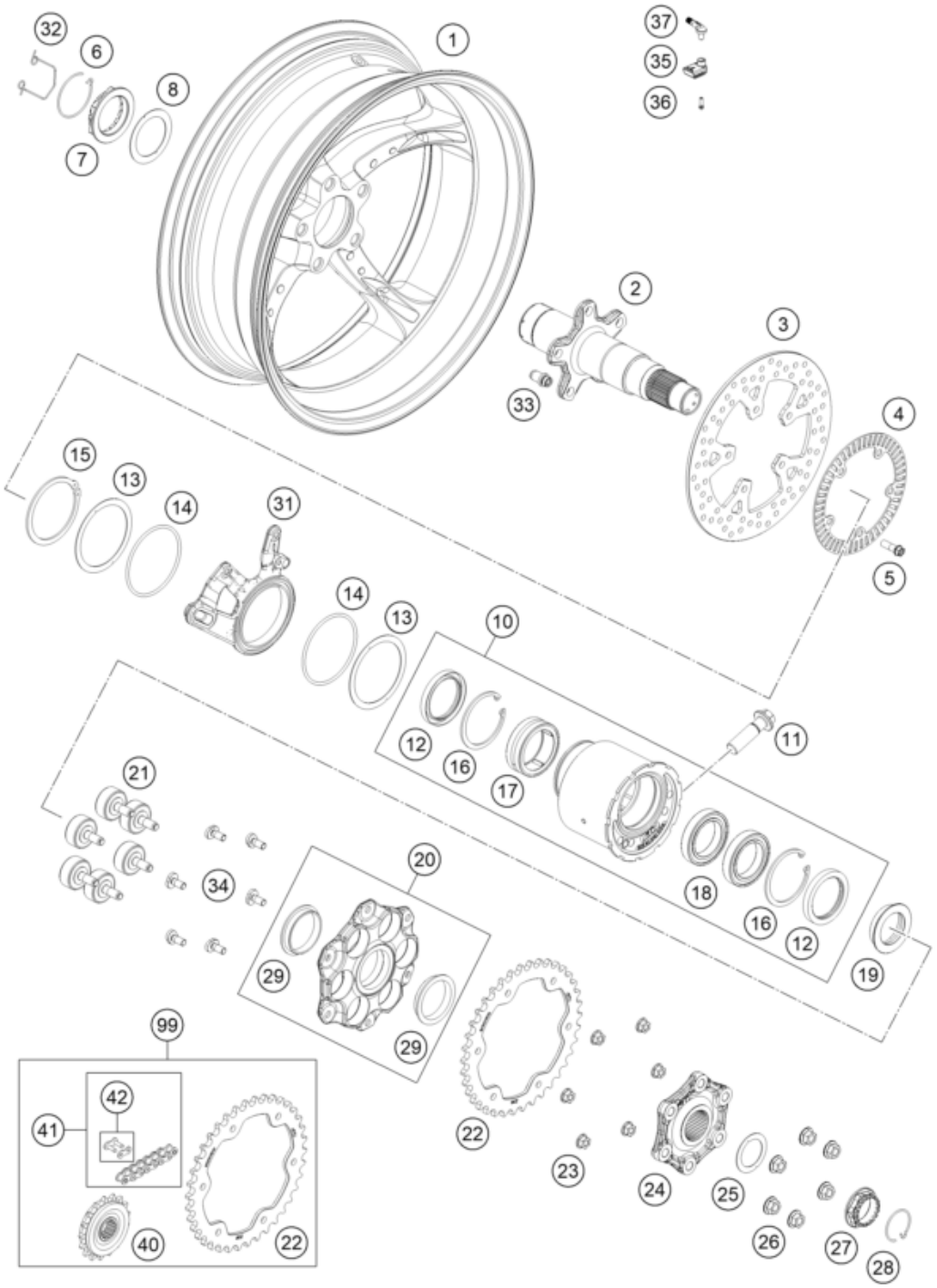

Pos	Part Number	Description	Additional Text	Quantity
1	61710004000C1	Rear wheel 6x17"		1.00
2	61310385100	Rear wheel axle		1.00
3	76010160000	BRAKE DISC 240MM		1.00
4	76042121000	Phonic wheel, rear		1.00
5	0025080256S	HH COLLAR SCREW M8X25 TX40		5.00
6	61310187000	Safety wire, right		1.00
7	61310186100	AXLE NUT M50X1.5		1.00
8	61310016000	WASHER 69X1		1.00
10	61310010044	CLUTCH HUB HOUSING CPL.		1.00
11	61310021000	HH collar screw M16X1.5X55		1.00
12	0760526880	Radial shaft seal 52X68X8		2.00
13	61310019000	WASHER 94X1		2.00

14	0770840035	O-ring 84.00X3.5 NBR70		2.00
15	0471078250	CIRCLIP DIN471-78X2.5		1.00
16	0472068250	CIRCLIP DIN472-68X2.5		2.00
17	0617456822	NEEDLE BEARING RNA4909-2RSR-XL		1.00
18	0625061909	Grooved ball bearing 61909-2RS		2.00
19	61310014100	Spacer ring		1.00
20	6131005404433S	SPROCKET SUPPORT CPL.		1.00
21	61310059100	Shock absorber		6.00
22	61310151038	SPROCKET STEEL DUKE 1290 Z38		1.00
23	06923080003	Hex. nut DIN EN 1661 M8 WS13		6.00
24	6131005000033S	JAR DAMPER CARRIER		1.00
25	76010116000	SHIM 50X1		1.00
26	06923100003	Hex. nut DIN6923 M10X1.25-10		6.00
27	61310086000	AXLE NUT M35X1.5		1.00
28	76010187000	Safety wire, left		1.00
29	76010052000	IGUS BEARING D=50		2.00
31	6131307500033S	BRAKE CALIPER ADAPTER BLACK		1.00
32	61310010011	Safety wire, inner		1.00
33	61310213000	Centering bolt M8		5.00
34	61310052100	Rear sprocket screw M8x18 S		6.00
35	61912033000	Tire pressure sensor		1.00
36	0900000501500S	Screw M5x15 for TPMS		1.00
37	61912033060	Angle valve 8.3 mm for TPMS		1.00
40	60033129017	Chain sprocket 17-t, damped 0		1.00
41	61310165118	CHAIN DID525 VAZ & MASTER LINK		1.00
42	61310066000	MASTER LINK FOR CHAIN DID VAZ		1.00
99	00050002029	DRIVETRAIN KIT 1290 SD 17T/38T		1.00