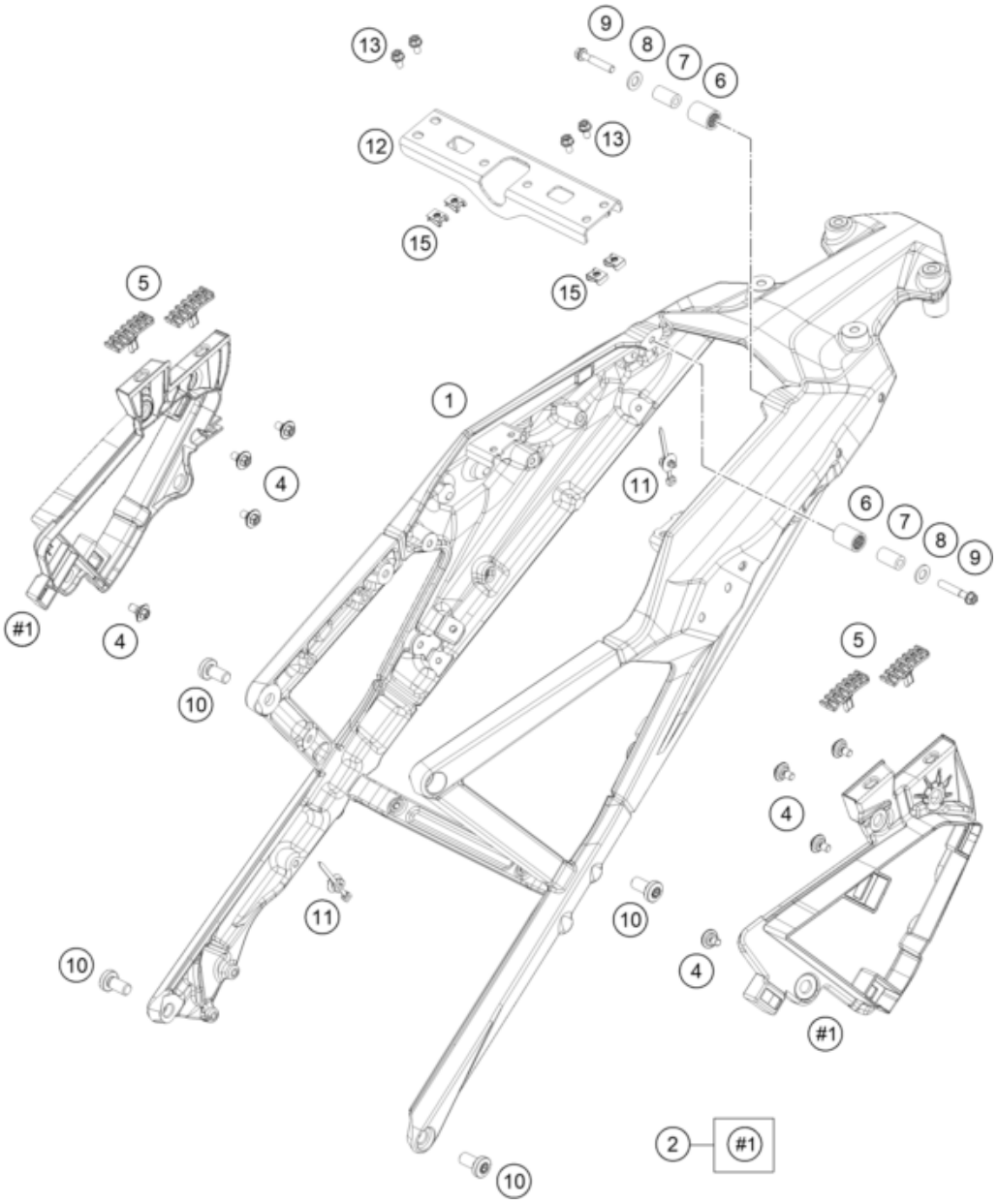

Pos	Part Number	Description	Additional Text	Quantity
1	61903002000EB	Subframe		1.00
2	61907040040	Seat cowl pad cpl.		1.00
4	83008000012	special screw M6x12x3		8.00
5	61907040055	Seat cowl pad, left, elastomer		4.00
6	60307048000	RUBBER SEAT-CONTACT SURFACE		2.00
7	60307049000	BUSH 6.2X12X21.5		2.00
8	0021060003	Washer DIN9021-A 6.4	ONLY USA	2.00
9	0025060356	HH collar screw M6x35 TX30		2.00
10	0035100209	AH collar screw M10x20 ISA45		4.00
11	61711094100	Cable strap w.plug-in foot for		2.00
12	61903002066	Retaining bracket lock		1.00
13	0025050106	HH collar screw M5x10 TX30		4.00
15	54603048600	RANGE CHANGE METAL NUT M5 INOX		4.00