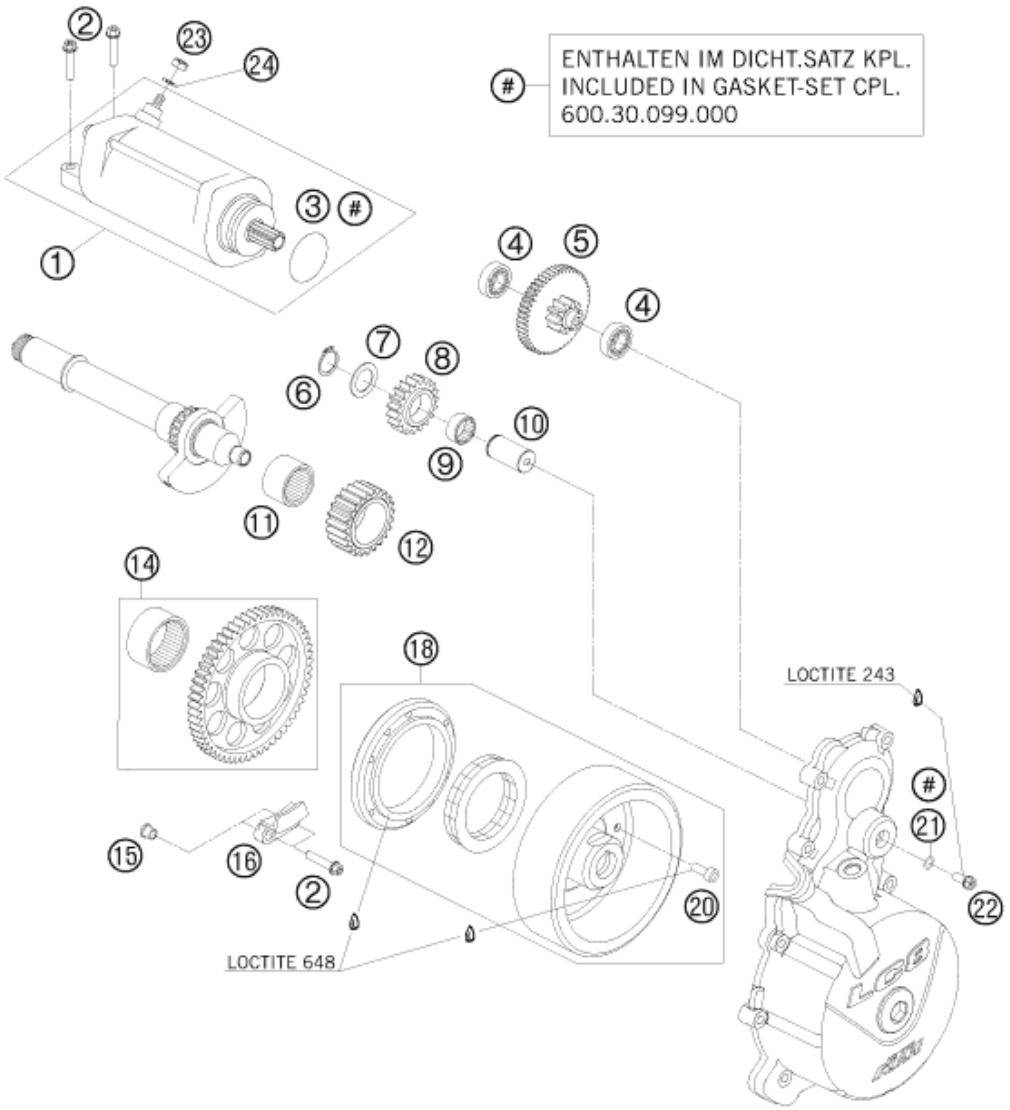

Pos	Part Number	Description	Additional Text	Quantity
1	60040001000	E-STARTER ENGINE CPL. LC8-E 03		1.00
2	0025060256	HH collar screw M6x25 TX30		4.00
3	0770335030	O-RING 33,5X3 VITON		1.00
4	0625160011	GROOV.BALL BEAR. 16001 JRX C3		2.00
5	60040017000	TORQUE LIMITER		1.00
6	0471170010	CIRCLIP DIN0471-17X1		1.00
7	50333041000	STOP DISC 17,2X26X1 B		1.00
8	60040022219	IDLER GEAR 1 19Z		1.00
9	0405172110	NEEDLE BEARING K 17X21X10		1.00
10	60040023100	BEARING BOLT		1.00
11	0618253220	NEEDLE BUSH HK2520 25/32/20 02		1.00
12	60040022023	IDLER GEAR 2 23-T 03		1.00
14	60040020000	FREEWHEEL GEAR WH. 57-T CPL.03		1.00
15	60040027050	SUPPORTING SLEEVE 03		2.00
16	60040027000	FREEWHEEL HOLDER 03		1.00
18	60039005100	IGNITION ROTOR 04	INCL. FREEWHEEL	1.00
20	0984060166	AH SCREW DIN6912 M6X16 10.9		6.00
21	0603061001	CU-SEAL RING DIN7603-6X10X1		1.00

22	0025060166	HH collar screw M6x16 TX30		1.00
23	0985060003	Self lock. nut DIN985-M6-A2		1.00
24	0125060003	WASHER DIN0125-A 6,4		1.00