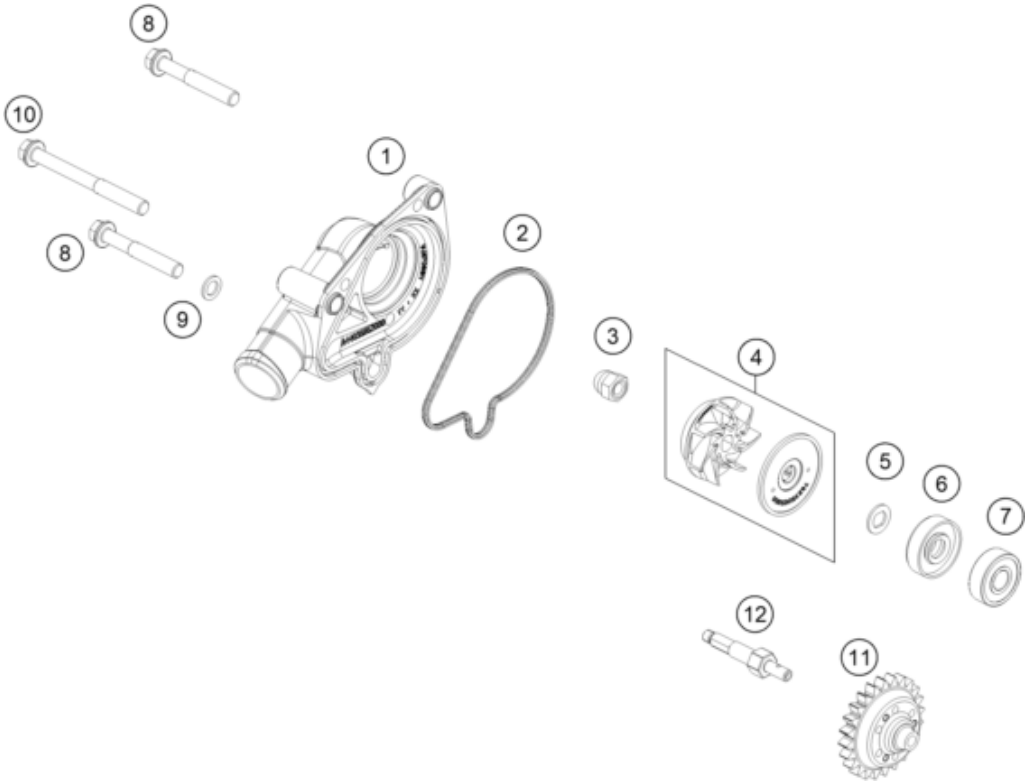

Pos	Part Number	Description	Additional Text	Quantity
1	A44035052000	Water pump cover		1.00
2	A44035052010	Water pump cover seal		1.00
3	61230045000	CAP NUT M6 STAINLESS STEEL		1.00
4	79235055044	WATER PUMP WHEEL CPL.		1.00
5	50435049000	PREFORMED WASHER		1.00
6	0760082472	SHAFT SEAL RING 8X24X7 A DUO		1.00
7	0625006087	Grooved ball bearing 608 2RS C		1.00
8	0025060406	HH collar screw M6x40 TX30		2.00
9	0603061001	CU-SEAL RING DIN7603-6X10X1		1.00
10	0025060606	HH collar screw M6x60 TX30		1.00
11	A44035062024	Drive gear wheel		1.00
12	A44035054000	Water pump shaft		1.00