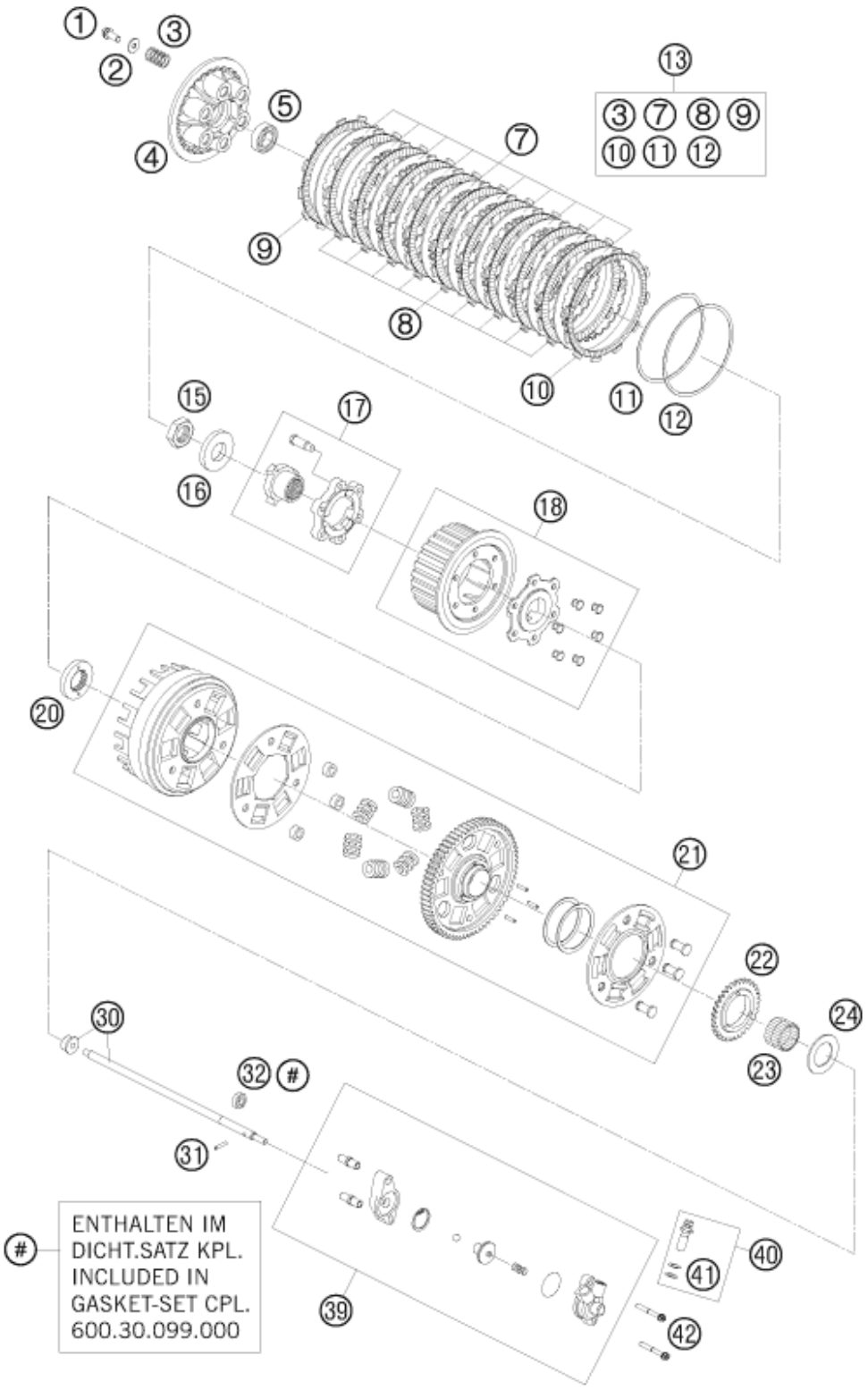

Pos	Part Number	Description	Additional Text	Quantity
1	0025060166	HH collar screw M6x16 TX30		6.00
2	0021060003	Washer DIN9021-A 6.4	ONLY USA	6.00
3	60032005000	CLUTCH SPRING LC8 2003		6.00
4	60032003000	PRESSURE CAP LC8 2003		1.00
5	0625060032	BALL BEARING 6003 JR2 C4		1.00
7	60032010000	STEEL DISC 2MM 03		10.00
8	60032011000	LINING DISK 2,8MM 03		9.00
9	60032111000	LINING DISK OUTSIDE 2,8MM 03		1.00

10	60032012000	LINING DISK TURN OUT 2,8MM 03		1.00
11	60032034000	BELLEVILLE SPRING 2003		1.00
12	60032035000	THRUST WASHER 2003		1.00
13	60032011010	CLUTCH KIT LC8 03-13		1.00
15	0936220155	HEXAGON NUT DIN0936-M22X1,5 R.		1.00
16	0125220393	PULLEY 22X39X3MM		1.00
17	60032080000	CLUTCH BOOSTER UNIT CPL. 03		1.00
18	60032002000	INNER CLUTCH HUB CPL. 03		1.00
20	60032021000	SECTION WASHER 03		1.00
21	60032001144	OUT.CLUTCH HUB CPL. 67-T 2004		1.00
22	60038001132	oil pump gear 32 teeth		1.00
23	0618303526	Needle bushing HK 30X35X26		1.00
24	60032020000	STOP DISK 30,2/50/2		1.00
30	60032054400	PUSH ROD CPL.		1.00
31	0402031780	Needle roll.DIN5402 NRB 3X17.8		1.00
32	0760091862	SHAFT SEAL RING 9X18X06 B-NBR		1.00
39	60032061244	SLAVE CYLINDER CPL. LC8 08		1.00
40	50332062000	Hollow screw cmpl. M 10x1 98		1.00
41	0603100141	sealing ring DIN 7603 10x14x1	ONLY FOR LC4 ADVENTURE	2.00
42	0025060506	HH collar screw M6x50 TX30		2.00