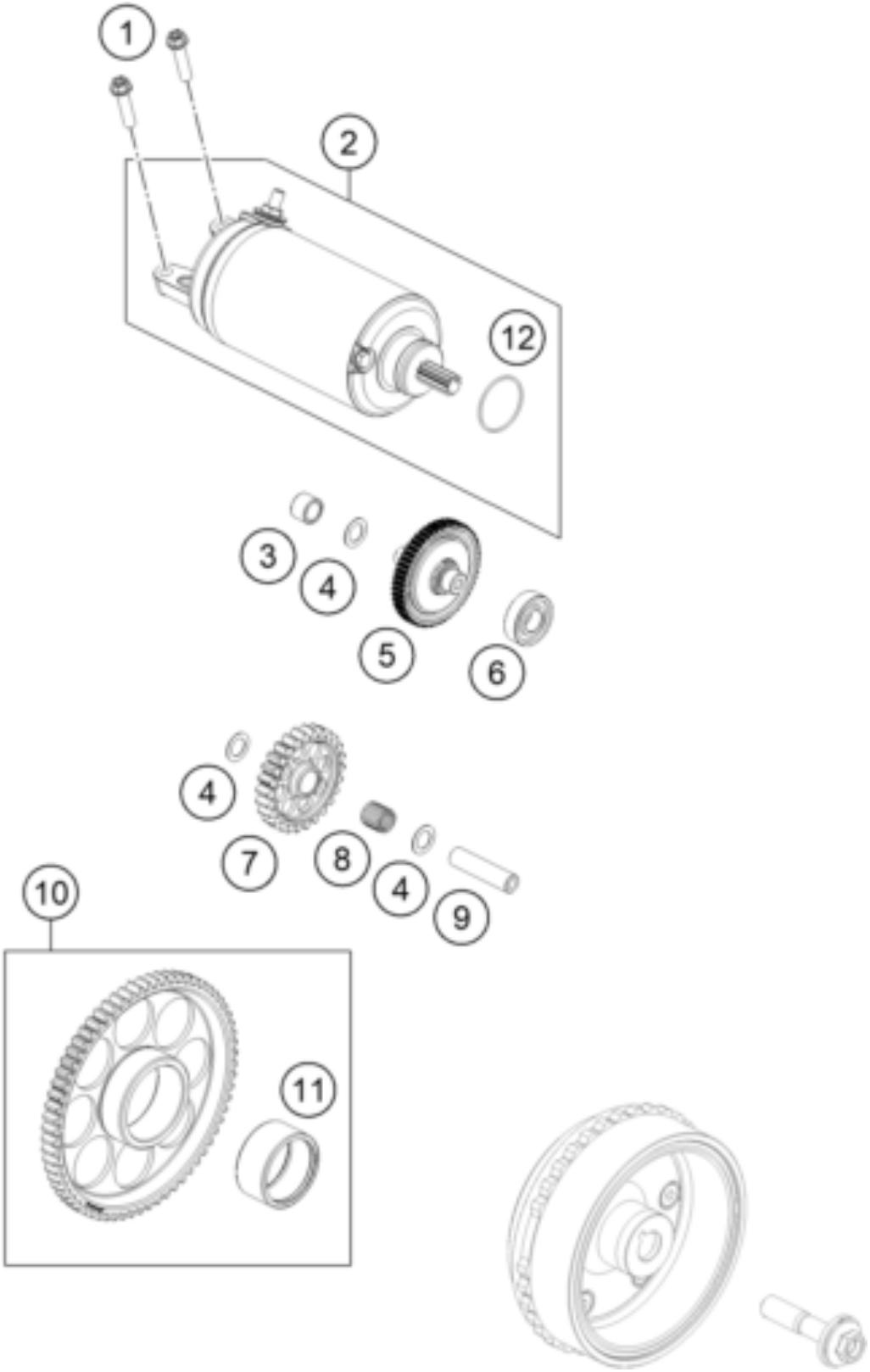

Pos	Part Number	Description	Additional Text	Quantity
1	C0000250602500	HH collar screw M6x25 ISA30		2.00
2	C90040001000	starter		1.00
3	C0618101410	needle sleeve HK 1010 10x14x10		1.00
4	C90038007010	Washer 10x16x0.5		3.00
5	60340117200	Torque limiter 10/55 cmpl.		1.00
6	C0625060016	deep groove ball bearing 6001.		1.00
7	C90040022000	Starter idler gear 26T		1.00

8	C90040090000	needle roller and cage K 10x13		1.00
9	C63540029000	pivot pin		1.00
10	63540020000	free wheel gear cpl.	L-PART	1.00
11	0618354220	NEEDLE BUSH HK3520 35/42/20		1.00
12	C0770244031	O-ring 24.40x3.10 NBR 70		1.00