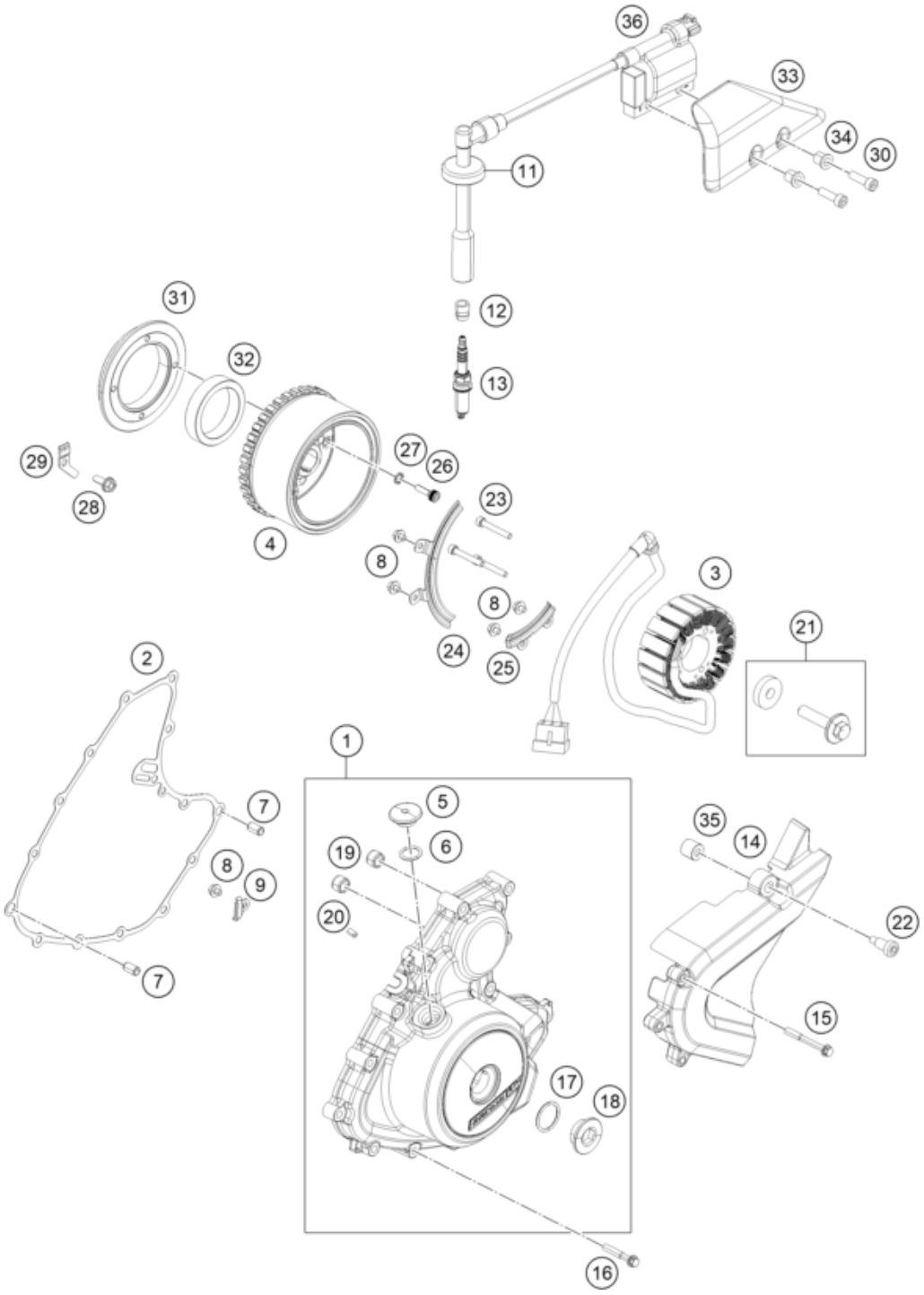


| Pos | Part Number | Description | Additional Text | Quantity |
|---|---|---|---|---|
| 1 | 93730002233 | Ignition cover cmpl. | | 1.00 |
| 2 | 93830040000 | Ignition cover gasket | | 1.00 |
| 3 | 94339004033 | Stator cmpl. | | 1.00 |
| 4 | 94339005033 | Rotor cmpl. | | 1.00 |
| 5 | 93839010100 | Screw plug, OT marking | | 1.00 |
| 6 | J770015824 | O-RING 15,8X2,4 | | 1.00 |
| 7 | 90130024000 | PIN DOWEL 8X6,4X14MM | 14mm length | 2.00 |
| 8 | J025050081 | Hex collar screw M5X8 | | 5.00 |
| 9 | 90230062000 | BRACKET HARNESS MAGNETO | | 1.00 |
| 11 | 90239090001 | RUBBER GASKET SPARK PLUG | | 1.00 |
| 12 | 93839091000 | Sealing boot spark plug | | 1.00 |

| | | | | |
|---|---|---|---|---|
| 13 | 93839093000 | Spark plug BOSCH VR6NEU M12X1. | | 1.00 |
| 14 | 90230060002 | front sprocket cover | | 1.00 |
| 15 | J025060506 | Hex collar screw M6X50 | | 3.00 |
| 16 | J025060353 | Hex collar screw M6X35 | | 12.00 |
| 17 | J770024015 | O-RING 24X2,5 | | 1.00 |
| 18 | 90230094000 | PLUG SCREW M24X1,5 | | 1.00 |
| 19 | 90240018000 | BUSH STARTER SHAFT | | 2.00 |
| 20 | 90230066300 | OIL NOZZLE | | 1.00 |
| 21 | 90239005050 | ROTOR SCREW CPL. | | 1.00 |
| 22 | 93003082000 | Bolt socket M6X1XL22 BLK stepe | | 1.00 |
| 23 | J912050353S | AH SCREW M5X35 SELF LOCKING | | 3.00 |
| 24 | 90230058000 | PLATE HARNESS MAGNETO | | 1.00 |
| 25 | 93730059000 | PLATE HARNESS 2 | | 1.00 |
| 26 | 90130001001 | SOCKET HEAD SCREW M6X20 | | 4.00 |
| 27 | J797060003 | TOOTHED WASHER M6 | | 4.00 |
| 28 | J028060164 | BOLT FLANGE M6X16 | | 1.00 |
| 29 | 90240020002 | RETAINER GEAR STARTER | | 1.00 |
| 30 | J912060353 | Hexagon screw M6X35 | | 2.00 |
| 31 | 90130001000 | SUPPORT FREEWHEEL CLUTCH | | 1.00 |
| 32 | 90140026000 | FREEWHEEL CLUTCH | | 1.00 |
| 33 | 93039010000 | cover ingition coil | | 1.00 |
| 34 | 93039011000 | sleeve cover ignition coil | | 2.00 |
| 35 | 93003081000 | Distance bushing sprocket cove | | 1.00 |
| 36 | 93339006033 | Ignision coil cmpl. | | 1.00 |