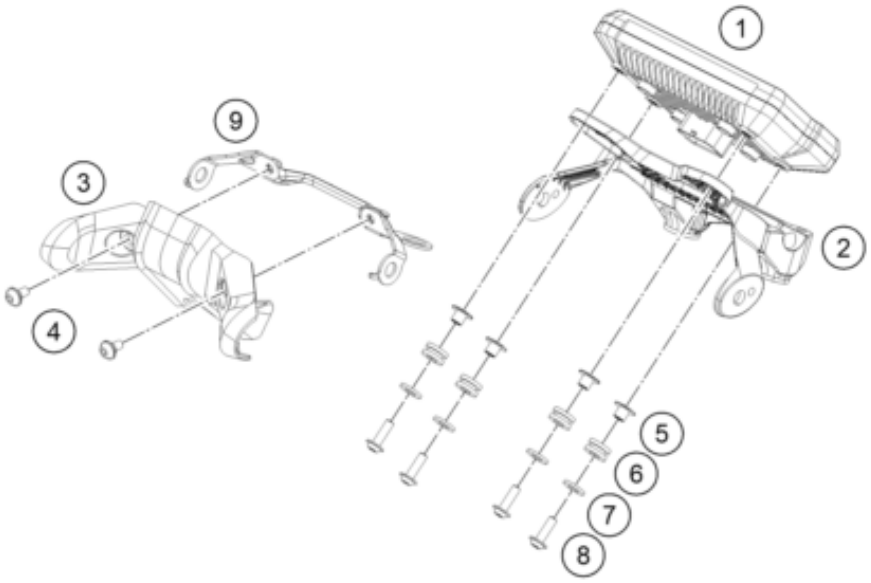

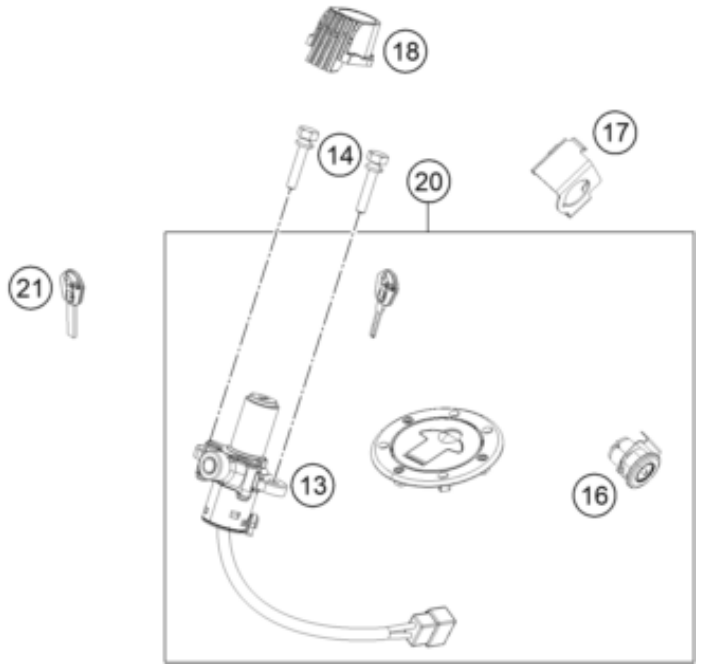

Pos	Part Number	Description	Additional Text	Quantity
1	93314069102	SPEEDOMETER		1.00
2	93014064000	Holder handsbar CUM TFT speedo		1.00
3	93014064100	Back cover TFT holder		1.00
4	93008020060	Screw M6X1X9		2.00
5	93014062010	Collar TFT speedo small		4.00
6	90507040001	RUBBER SLEEVE		4.00
7	93308015010	Washer, license plate holder s		4.00
8	J031060183	Roundhead screw M5X18		4.00
9	93014064200	Bracket TFT Cover black		1.00
13	93011066044	Ignition lock complete		1.00
14	93011064100	Special screw for ignition loc		2.00
16	90107050050	SEAT LOCK		1.00
17	93007051000	Retaining bracket		1.00

18	93011066010	Positioning rubber		1.00
20	94311066044	Lock Set		1.00
21	90111067100	BLANK KEY 125/200 DUKE		0.00
21	90111067000	KEY		1.00