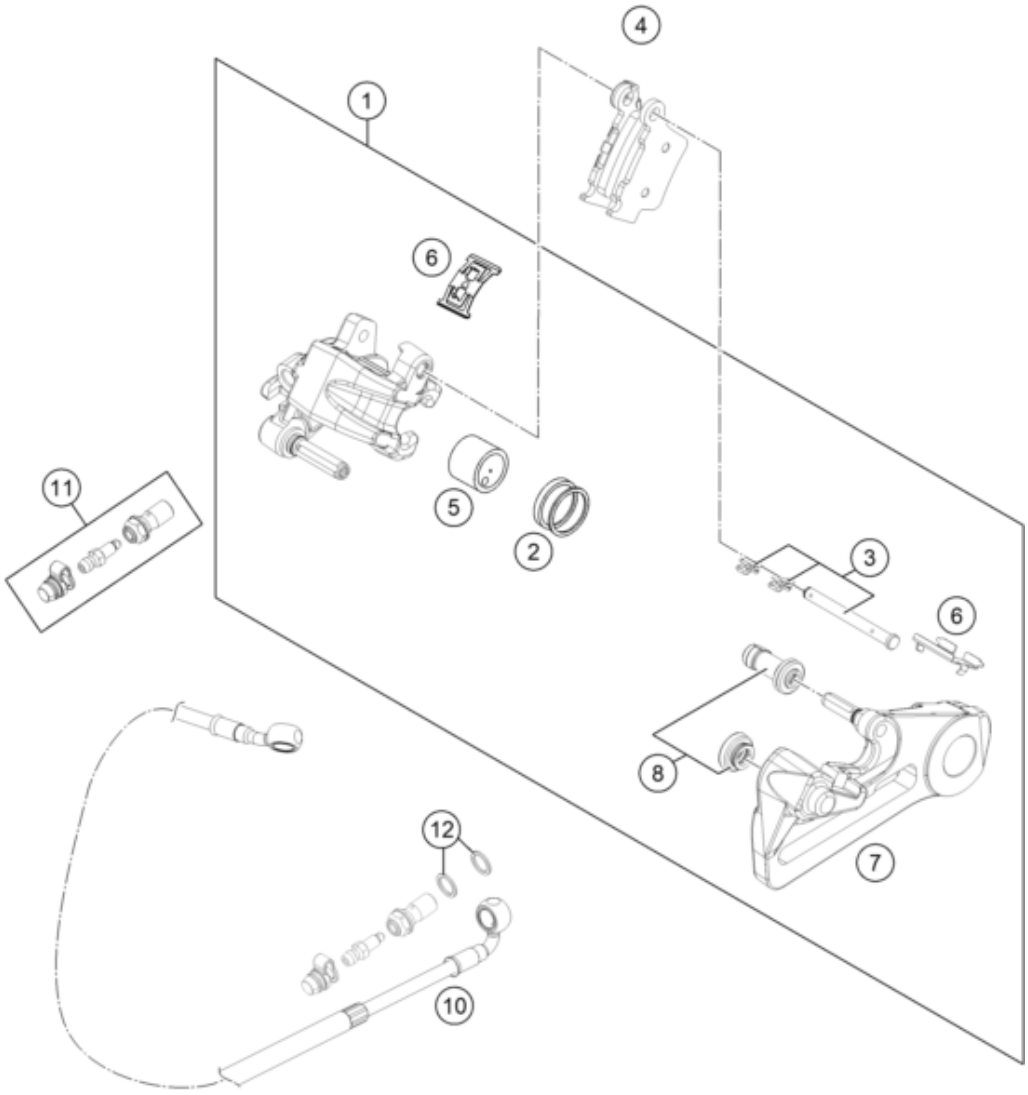

Pos	Part Number	Description	Additional Text	Quantity
1	A46013080001	Rear brake caliper PF 26 b cmp		1.00
2	50313081200	REPAIR KIT SEALING RINGS 26MM		1.00
3	54813082000	Bolt set for brake caliper 03		1.00
4	54813090300	BRAKE PAD SET REAR TOYO		0.00
4	79013090000	BRAKE PAD REAR TOYO B204		1.00
5	77713083000	BRAKE PISTON 26MM 2013		1.00
6	54813018000	Retaining spring set 2003		1.00
7	A46013075000	Brake caliper support		1.00
8	54613218100	CUP SET SHORT		1.00
10	77213070300	Rear Brakehose		1.00
11	62513020000	BLEEDER SCREW CPL. 05		1.00
12	0603100141	sealing ring DIN 7603 10x14x1	ONLY FOR LC4 ADVENTURE	2.00