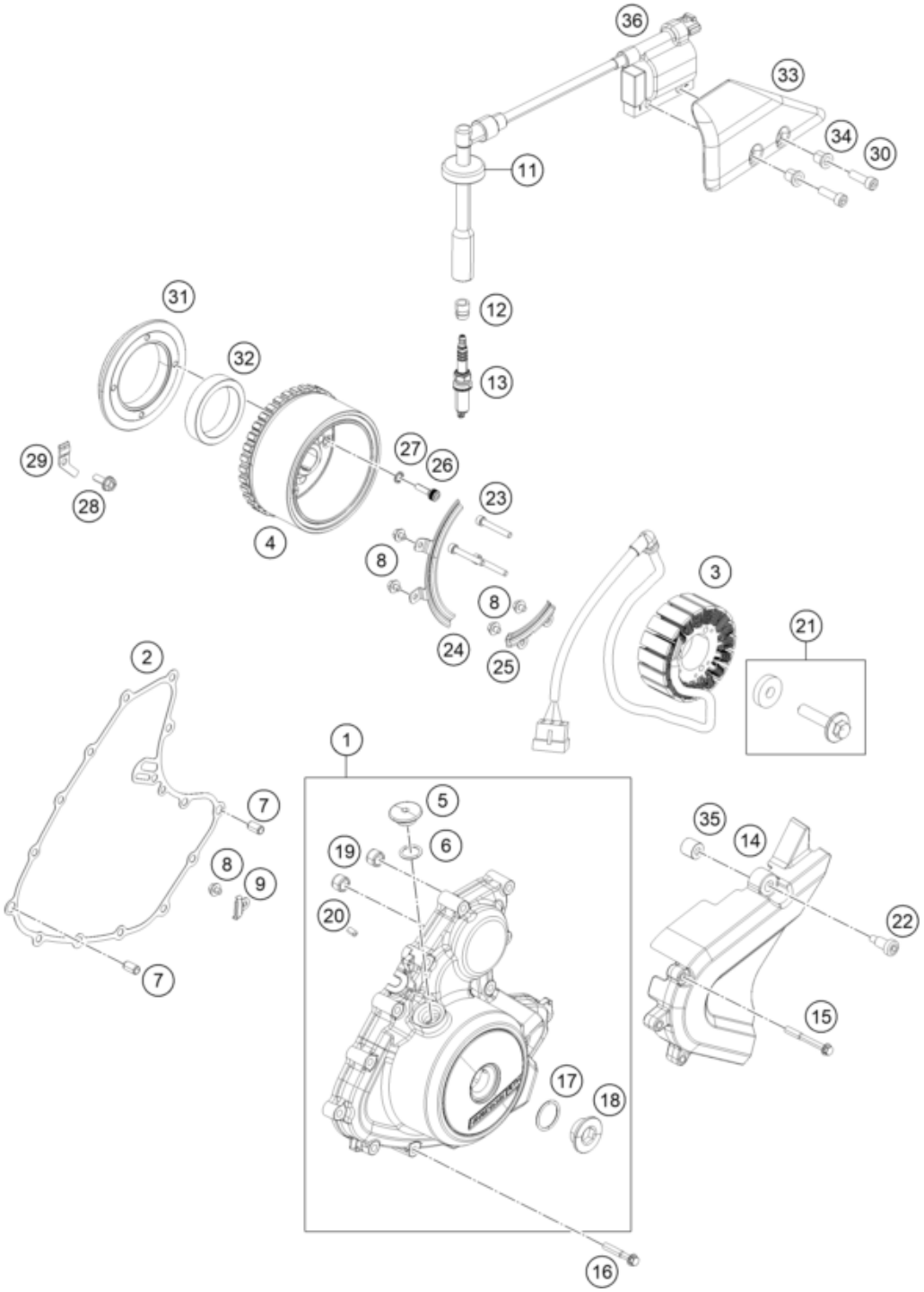

Pos	Part Number	Description	Additional Text	Quantity
1	93730002233	Ignition cover cmpl.		1.00
2	93830040000	Ignition cover gasket		1.00
3	94339004033	Stator cmpl.		1.00
4	94339005033	Rotor cmpl.		1.00
5	93839010100	Screw plug, OT marking		1.00
6	J770015824	O-RING 15,8X2,4		1.00
7	90130024000	PIN DOWEL 8X6,4X14MM	14mm length	2.00
8	J025050081	Hex collar screw M5X8		5.00
9	90230062000	BRACKET HARNESS MAGNETO		1.00
11	90239090001	RUBBER GASKET SPARK PLUG		1.00
12	93839091000	Sealing boot spark plug		1.00

13	93839093000	Spark plug BOSCH VR6NEU M12X1.		1.00
14	90230060002	front sprocket cover		1.00
15	J025060506	Hex collar screw M6X50		3.00
16	J025060353	Hex collar screw M6X35		12.00
17	J770024015	O-RING 24X2,5		1.00
18	90230094000	PLUG SCREW M24X1,5		1.00
19	90240018000	BUSH STARTER SHAFT		2.00
20	90230066300	OIL NOZZLE		1.00
21	90239005050	ROTOR SCREW CPL.		1.00
22	93003082000	Bolt socket M6X1XL22 BLK stepe		1.00
23	J912050353S	AH SCREW M5X35 SELF LOCKING		3.00
24	90230058000	PLATE HARNESS MAGNETO		1.00
25	93730059000	PLATE HARNESS 2		1.00
26	90130001001	SOCKET HEAD SCREW M6X20		4.00
27	J797060003	TOOTHED WASHER M6		4.00
28	J028060164	BOLT FLANGE M6X16		1.00
29	90240020002	RETAINER GEAR STARTER		1.00
30	J912060353	Hexagon screw M6X35		2.00
31	90130001000	SUPPORT FREEWHEEL CLUTCH		1.00
32	90140026000	FREEWHEEL CLUTCH		1.00
33	93039010000	cover ingition coil		1.00
34	93039011000	sleeve cover ignition coil		2.00
35	93003081000	Distance bushing sprocket cove		1.00
36	93339006033	Ignision coil cmpl.		1.00