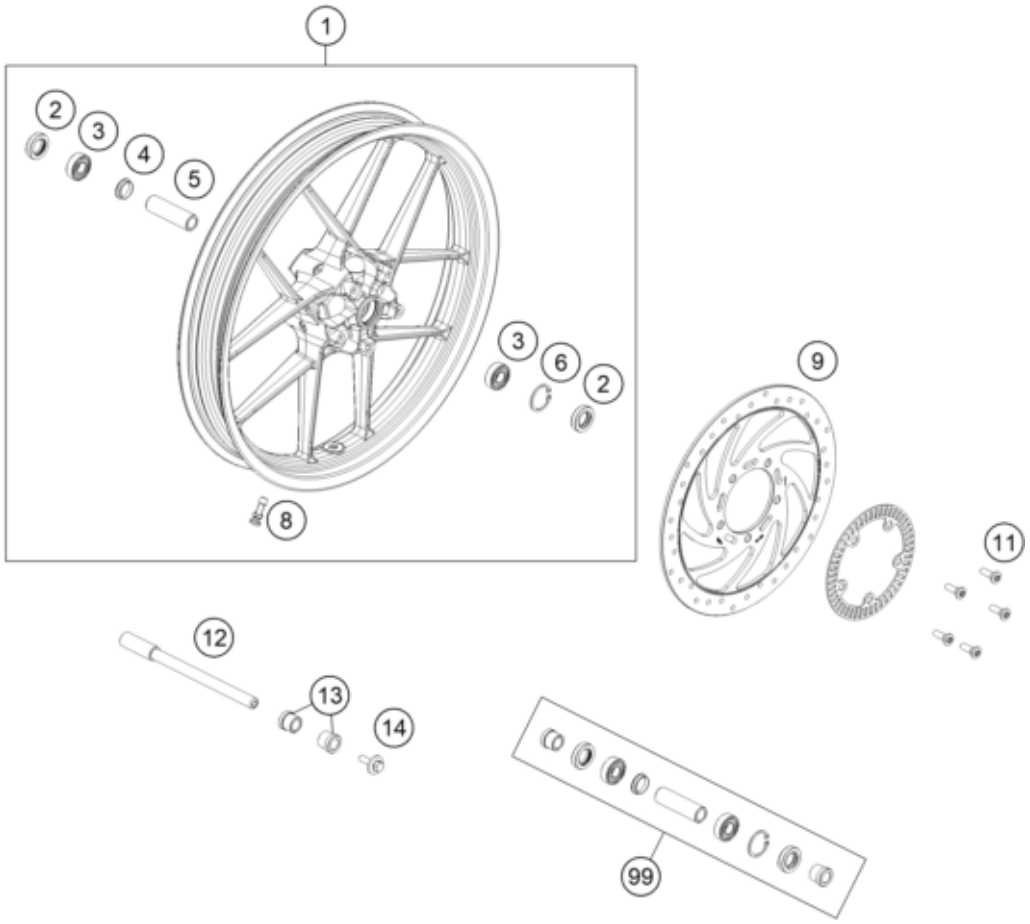

Pos	Part Number	Description	Additional Text	Quantity
1	95809001144C1	Front Wheel Adv 22 -Black	.	1.00
2	J760223508	SHAFT SEAL RING 22X35X8		2.00
3	J625062023	BALL BEARING 6202		2.00
4	90109011001	Fixation bearing spacer tube		1.00
5	90109011000	Spacer front wheel		1.00
6	J472035150	Circlip 35X1,5		1.00
8	90109076000	VALVE CPL.		1.00
9	95809060100	disc brake dia 320		1.00
11	90110062000	SPECIAL SCREW M8X25 SELF LOCK.		5.00
12	93009081000	Front axle		1.00
13	90209083000	BEARING BUSHING		2.00
14	90109082000	flanged bolt M8		1.00
99	90109015100	FRONT WHEEL REP. KIT		1.00