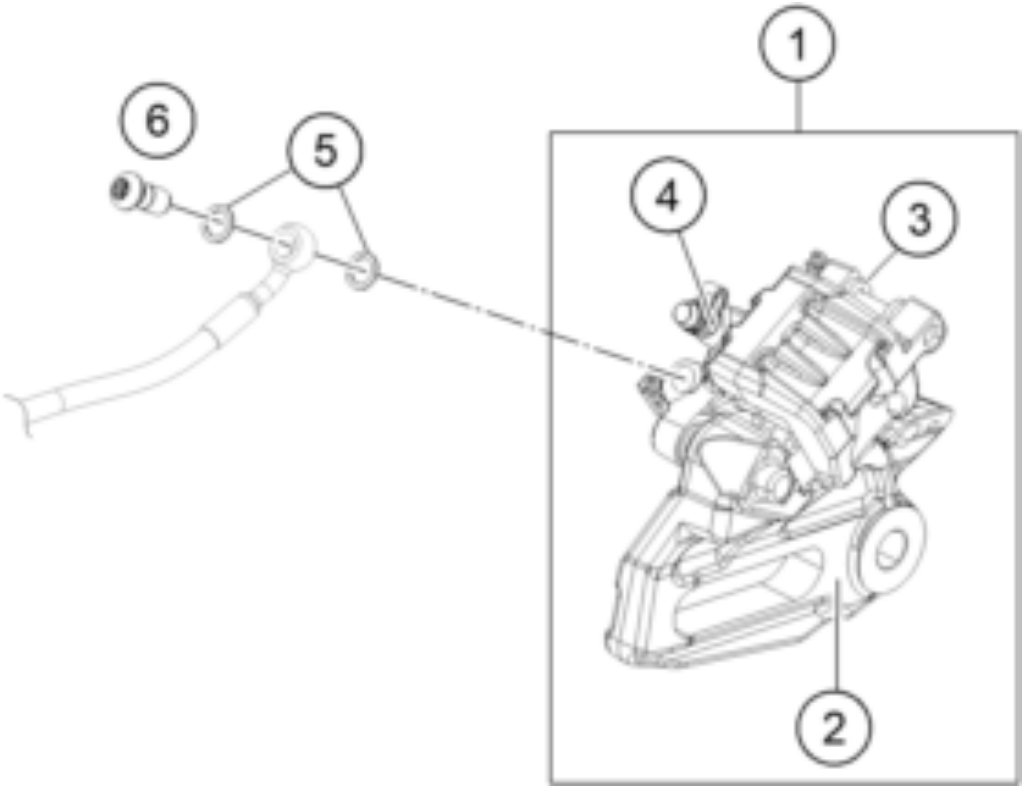


| Pos | Part Number | Description | Additional Text | Quantity |
|---|---|---|---|---|
| 1 | 94513080000 | CALIPER ASSEMBLY REAR | | 1.00 |
| 2 | 90113075000 | BRAKE CALIPER SUPPORT REAR | | 1.00 |
| 3 | 90113090000 | REAR BRAKE PADS - SET | | 1.00 |
| 4 | 90113121000 | BLEEDER SCREW | | 1.00 |
| 5 | 90113026000 | COPPER GASKET | | 8.00 |
| 6 | 90113013000 | BANJO SCREW | | 1.00 |