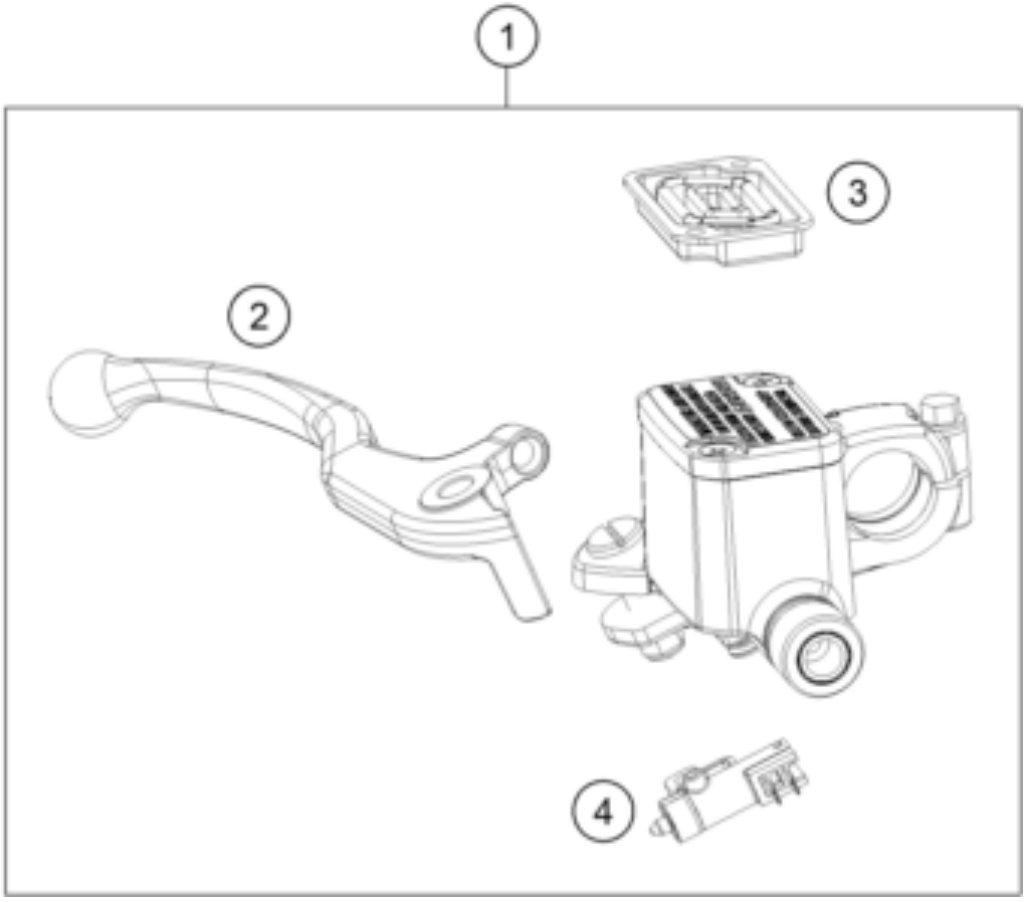

Pos	Part Number	Description	Additional Text	Quantity
1	93513001033	HAND BRAKE CYLINDER CPL.		1.00
2	90113002100	HAND BRAKE LEVER		1.00
3	90113001007	MEMBRANE		1.00
4	90111050000	brake light switch, front		1.00