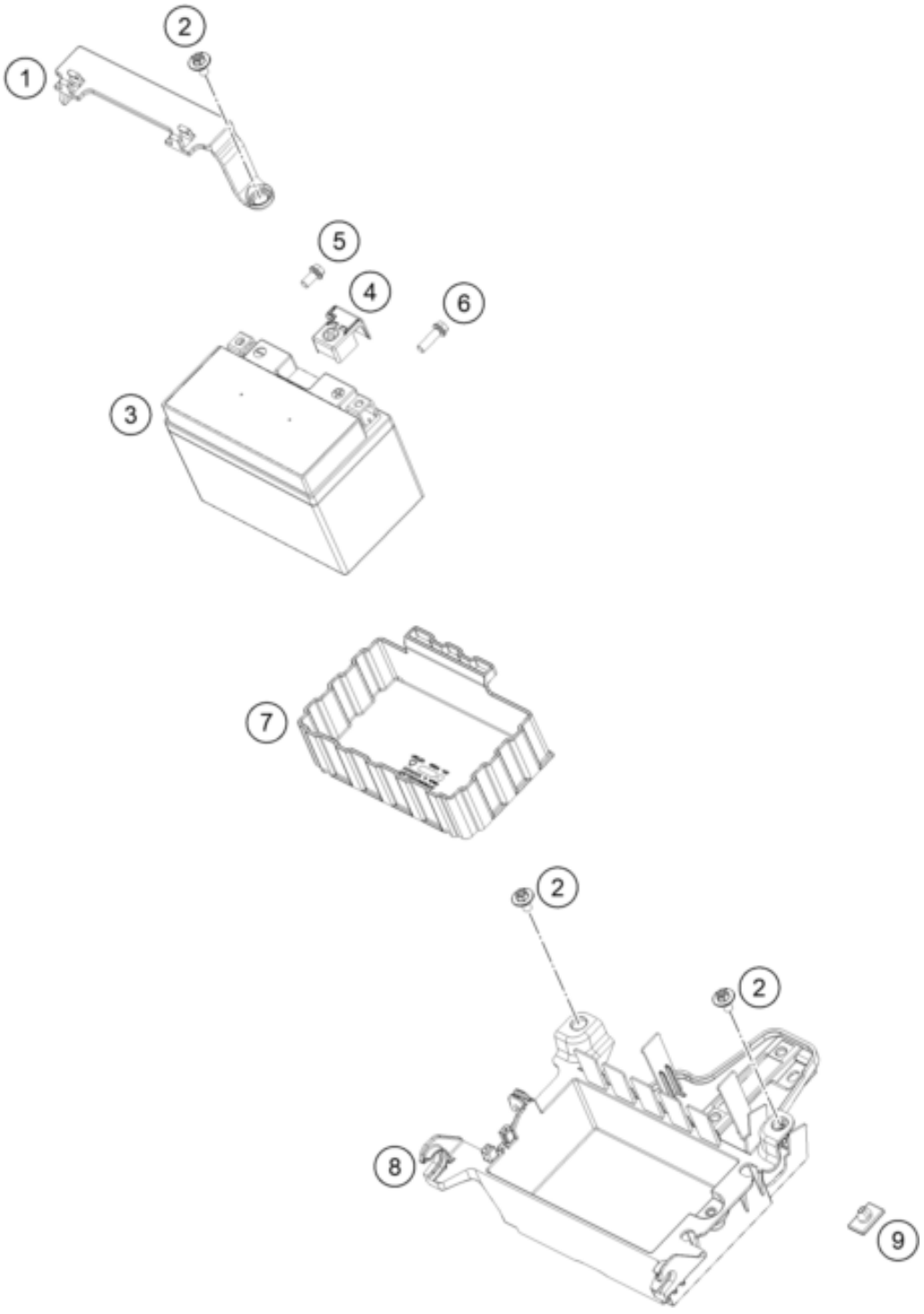

Pos	Part Number	Description	Additional Text	Quantity
1	64111055000	clamping bracket		1.00
2	83008000012	special screw M6x12x3		3.00
3	C90111053000	Battery HTZ12A-BS(DA) charged		1.00
4	62111059060	COVER POSITIVE POLE		1.00
5	0025060126	HH collar screw M6x12 TX30		1.00
6	0025060206	HH collar screw M6x20 TX30		1.00
7	64111053050	Accumulator Casing		1.00
8	64111054000	battery holder		1.00
9	77307040041	Isolation pad		1.00