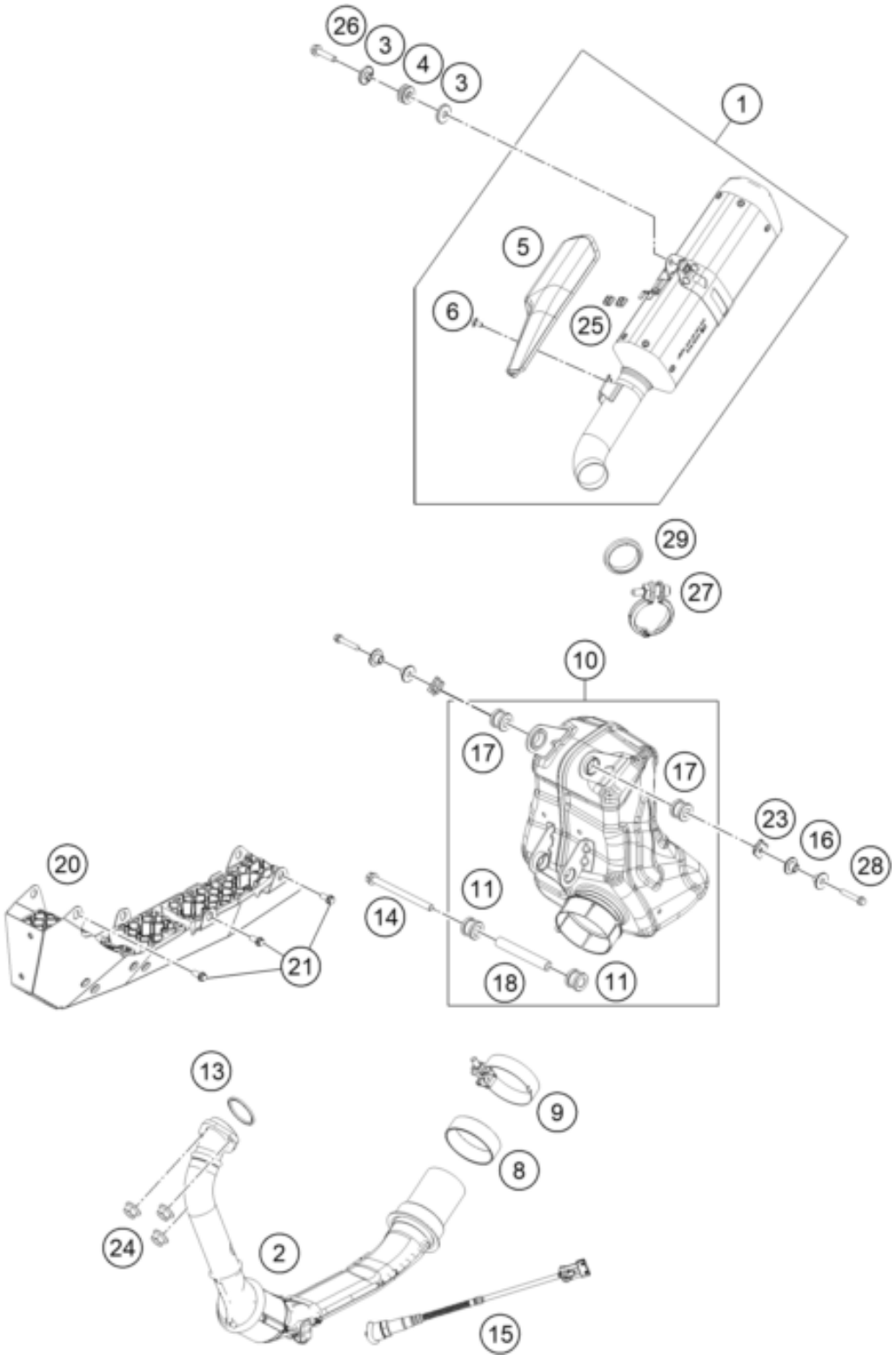

Pos	Part Number	Description	Additional Text	Quantity
1	94305083000	MUFFLER ASSEMBLY SECONDARY		1.00
2	94305007031	PIPE ASSEMBLY A		1.00
3	93805095000	BUSH MUFFLER		2.00
4	93805096000	DAMPER MUFFLER		1.00
5	93805011000	MUFFLER SHIELD		1.00
6	J031060103	Lens head screw M6X10		1.00
8	94305050072	Exhaust flange gasket, premuff		1.00
9	94305051000	Exhaust clamp		1.00

10	28105050044	ASSEMBLY PREMUFFLER		1.00
11	90105068100	damper, bottom	ONLY FOR NEW SILENCER VERSION	2.00
13	90105004000	exhaust flange gasket		1.00
14	J027081053	HH COLLAR SCREW M8X105 SW12		1.00
15	94341090000	Oxygen sensor		1.00
16	90205086001	muffler mounting spacer bushin		4.00
17	90205068000	damper, bottom		2.00
18	90105084000	muffler mounting tube		1.00
20	94305065033	Heat protection cmpl.		1.00
21	J028060143	BOLT FLANGED M6X14		6.00
23	90103097000	clip nut		2.00
24	J926080003	Hex collar nut M6		3.00
25	93805011003	GROMMET MUFFLER SHIELD		2.00
26	J025080353	BOLT FLANGED M8X35		1.00
27	94305051045	Exhaust clamp		1.00
28	90105000002	BOLT SILENCER MTG		2.00
29	94305050071	Exhaust flange gasket, muffler		1.00