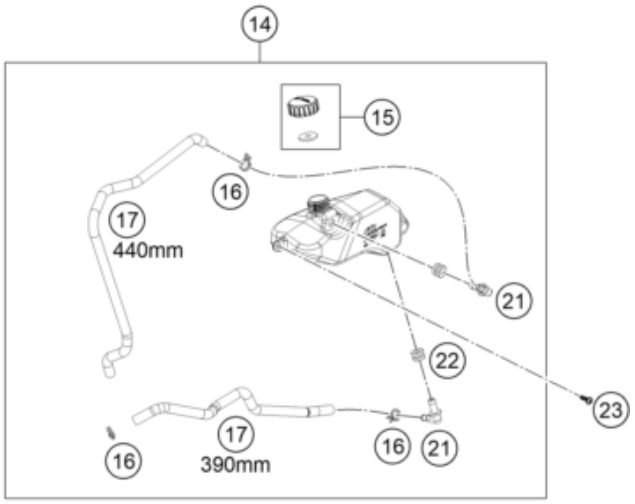

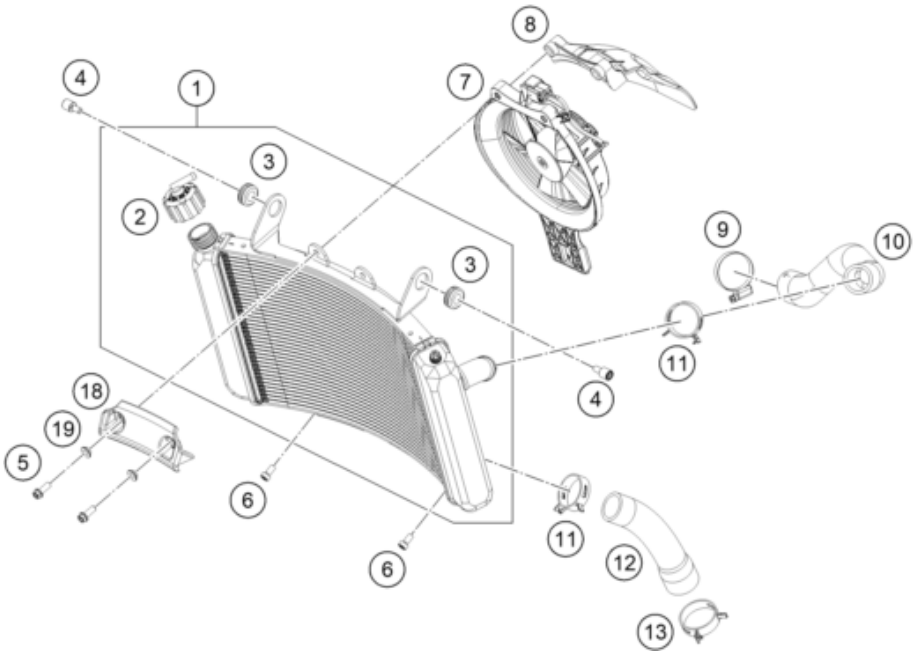

Pos	Part Number	Description	Additional Text	Quantity
1	64135010000	Water Radiator		1.00
2	62535009000	RADIATOR CAP 1,4 BAR		1.00
3	41001052000	RUBBER SLEEVE D=12MM		2.00
4	69035001000	STUD BOLT M6 11X11 ISA45		2.00
5	C0025060166S	Screw M6x16		2.00
6	014580060126	SHCS ISO 14580 M6x12		2.00
7	64135044033	Fan cover cpl.		1.00
8	64135042100	Air deflector radiator		1.00
9	10001120000	Hose clamp 25-40 SGT 4		1.00
10	64135027000	molded hose radiator		1.00
11	00050325706	VARIABLE ONE-EAR CLAMP 32,5MM		2.00
12	64135026000	Molded hose radiator		1.00
13	00049380121	Spring band clamp STD DN38		1.00
14	64135065000	compensating reservoir		1.00

15	60335066044	Latch, compens. tank cpl.		1.00
16	58007117000	YDNAC-CLAMP 10107 10MM		3.00
17	60035067001	HOSE 6X10 EPDM 03		0.00
18	64135032000	Border protection radiator		1.00
19	69004060150	bushing chain protection		2.00
21	60035068000	Angle piece, reservoir		2.00
22	70003065000	RUBBER SLEEVE 6X9X14MM		2.00
23	0081040121	EJOT Delta PT K40x12		1.00