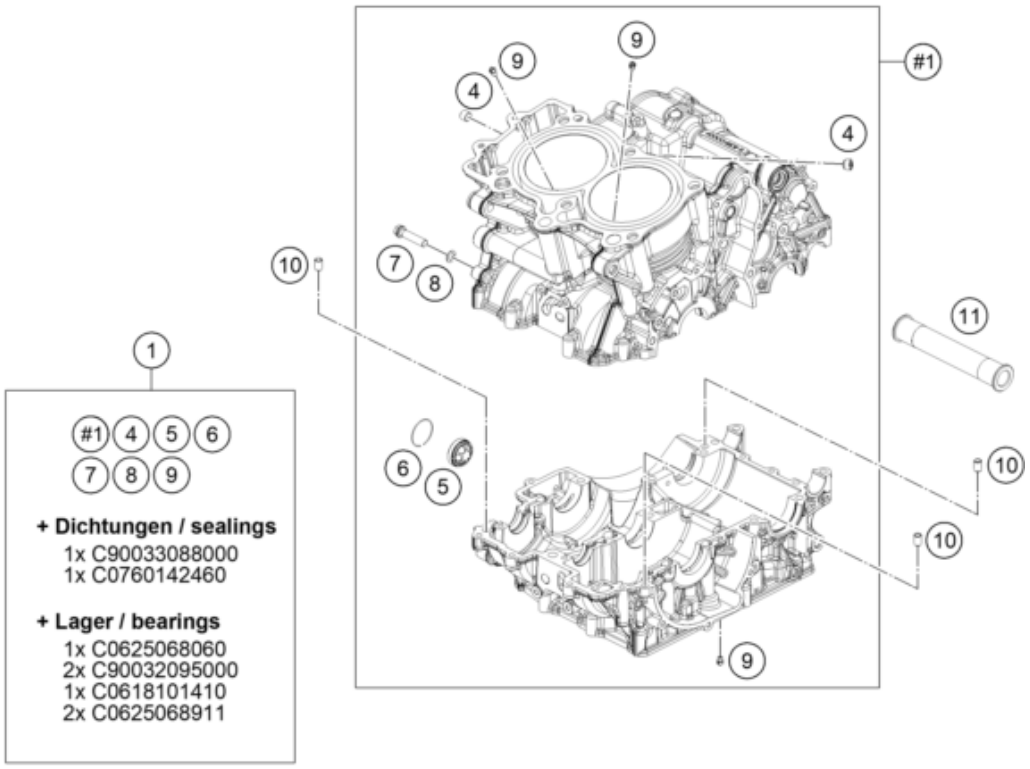



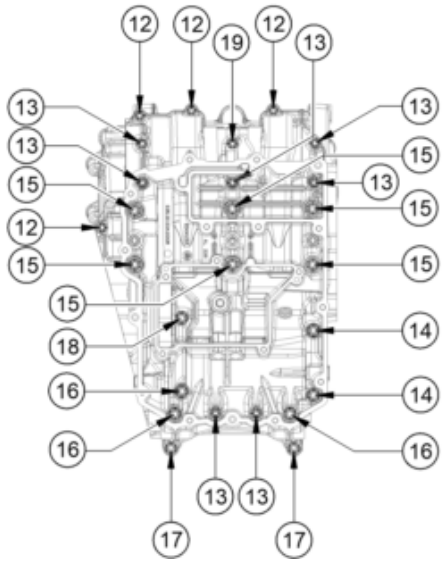

Pos	Part Number	Description	Additional Text	Quantity
1	C9003000024424	Engine case compl.		1.00
4	C0906100100	Screw 10X1-8 DIN 906		2.00
5	59030019200	OIL SIGHT GLASS		1.00
6	61030019050	CIRCLIP OIL LEVEL GLASS 03		1.00
7	C0025080356	Screw M8x35		1.00
8	C0603082131	Cu ring d8,2/13/1		1.00
9	C90030063070	oil jet 70 M5		3.00
10	C90030024000	Dowel		3.00
11	C90030010000	housing socket		1.00
12	C00002506030U0	Hex collar scr., M6x30, ISA 30		4.00
13	C00002506060U0	Hex collar scr., M6x60, ISA 30		7.00
14	C0025080906	Screw M8x90		2.00

15	C00002508090U0	Hex collar scr., M8x90, ISA 40		6.00
16	C0025080656	Screw M8x65		3.00
17	C0025080556	Screw M8x55		2.00
18	C0025080456	Screw M8x45		1.00
19	C00002508065U0	Hexagon collar nut M8x65 ISA 4		1.00
99	C90030099000	Engine gasket kit		1.00