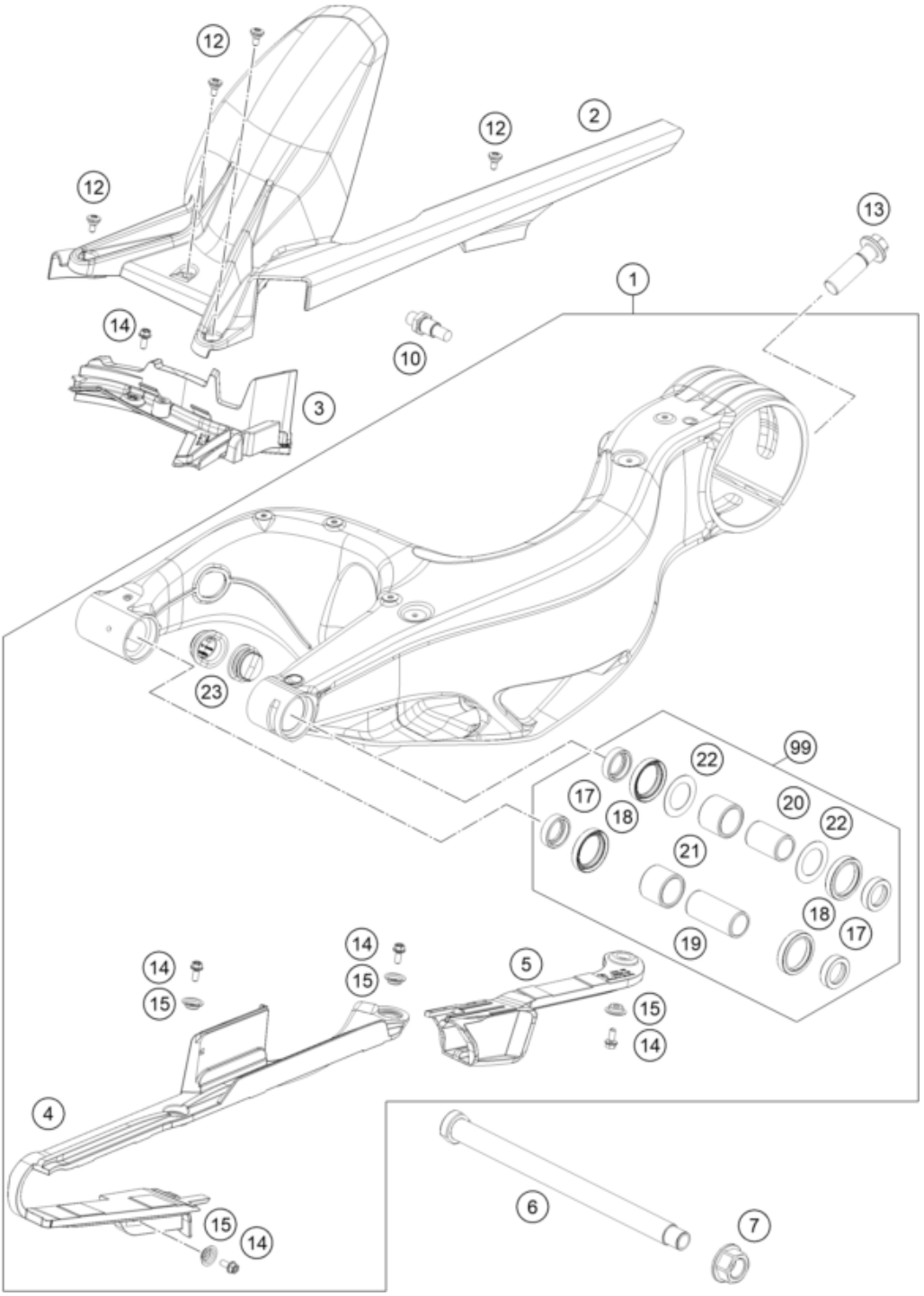

Pos	Part Number	Description	Additional Text	Quantity
1	6170403004433	Swingarm cmpl. SD-R 20	includes steel screws	1.00
2	61704950000	Splash protection, carbon		1.00
3	61704042000	Brake line guide		1.00
4	61704060000	Front chain slider		1.00
5	61704070000	Rear chain slider		1.00
6	69004037344	Swingarm pivot		1.00
7	60004038200	Collar nut M19X1.5 SW=27MM		1.00
10	76004142000	BOLT BRAKE SADDLE BRACKET		1.00
12	69008021160	special screw M5x12		4.00
13	61310021000	HH collar screw M16X1.5X55		1.00
14	0025050126	HH collar screw M5x12 TX30		5.00

15	46104066050	BUSH FOR CHAINSLIDER GUARD 02		4.00
17	0760304073	Radial shaft seal 30X40X7		4.00
18	60004034000	Bucket f. shaft seal ring 03		4.00
19	69004032000	Inner ring JR 20X25X56.5		1.00
20	60004032000	INNER RING JR20X25X38,5 03		1.00
21	60004031000	NEEDLE BUSH HK2526B 03		2.00
22	60004033000	Stop disk 03		2.00
23	61304041100	Locking cap swingarm		2.00
99	69004230010	swingarm rep. kit		1.00