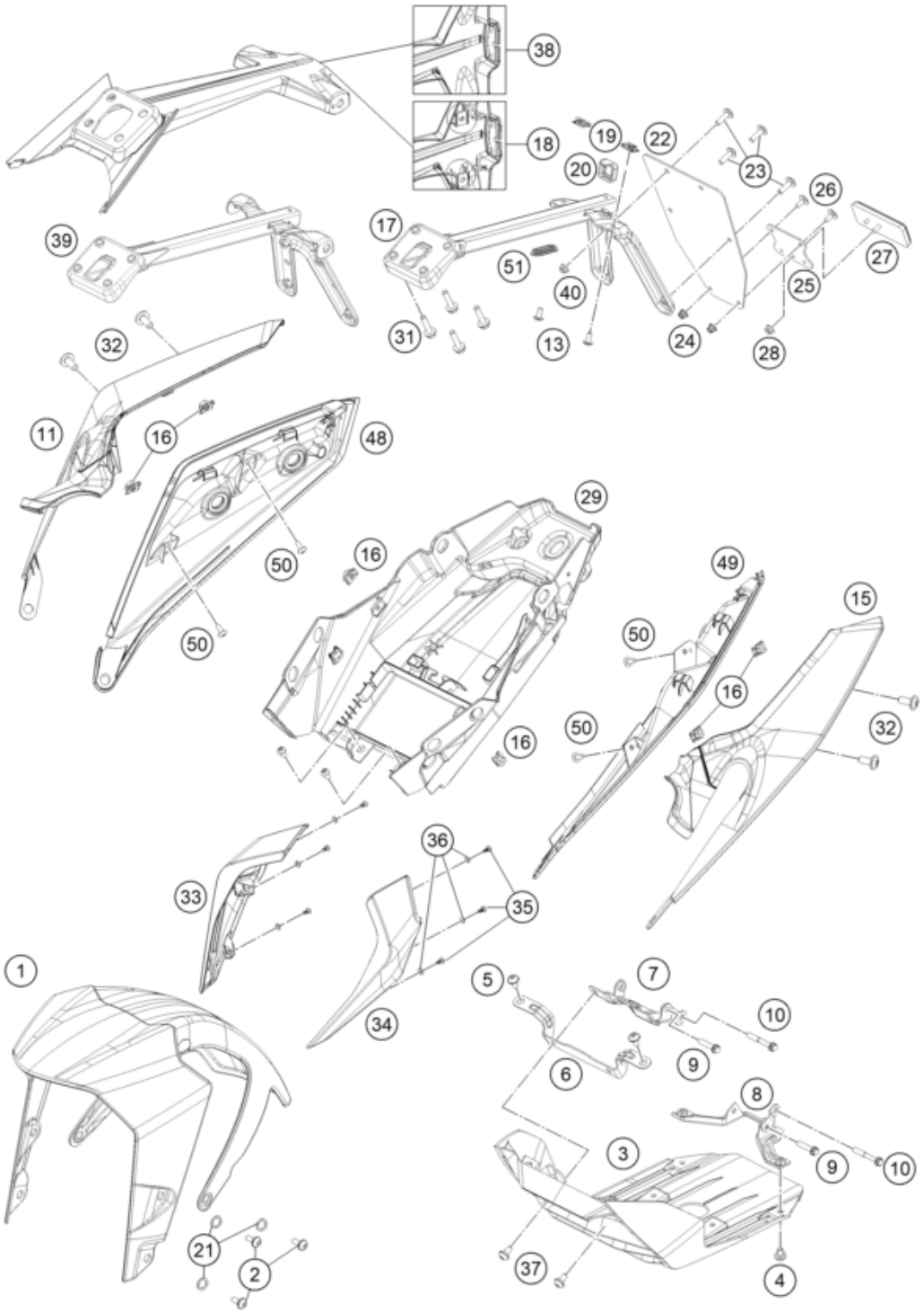

Pos	Part Number	Description	Additional Text	Quantity
1	9300801003330	Front fender cpl. black		1.00
2	J031050161	Panhead screw with shoulder		6.00
3	93308020000	Under-engine fairing 250/390		1.00
4	93008020060	Screw M6X1X9		4.00
5	90508006001	SOCKET HEAD BOLT M6X12		2.00
6	93008021000	Bracket belly pan front		1.00
7	93008021020	Bracket belly pan rear		1.00
8	93008021120	Bracket belly pan rear		1.00
9	J025060144	Hexagon srew M6X14		4.00
10	J025060359	Hexagon screw M6X35		2.00

11	93008039000AB	Seat cowl up rh cer white		1.00
13	J031050123	Lens head screw M5X12		2.00
15	93008018010AB	DUKE 390 SEATCOWL UP RHJP18100		1.00
16	90108050001	CLIP NUT M5		10.00
17	93008015200	Structure assembly plate numbe		1.00
18	93008015050	License plate holder support c		1.00
19	93008083010	Clip Nut M5		2.00
20	93008015010	Protection rubber		1.00
21	93009059000	Washer nylon		6.00
22	90808016000	REAR FENDER EXT.		1.00
23	90508006003	AH SCREW M6X1X20		4.00
24	90102031010	HEX NUT M5 AF8		2.00
25	90514044000	REFLECTOR MOUNTING		1.00
26	J005050123	FLAT HEAD SCREW M5X12 PH		2.00
27	90514045000	REFLECTOR		1.00
28	90204060001	HH COLLAR NUT		1.00
29	93008019000	Tail end lower part		1.00
31	J025060226	Hex collar screw M6X22		4.00
32	90508008001	AH SCREW M8X20		4.00
33	9300800100030	Side mask right LED black		1.00
34	9300802400030	Side mask left LED black		1.00
35	J981030101	Lens head screw M3,5X10		6.00
36	J125040003	Washer plain small 4.5X8X0.5XB		6.00
37	93008040000	Screw M6X1X13		2.00
38	93008015150	License plate holder support,		1.00
39	93008015300	Licence plate holder support		1.00
40	90508016001	Nut nyloc flanged M6X1XHT.9.1		2.00
48	93008019030	SEAT COWL LOWER RH		1.00
49	93008019020	SEAT COWL LOWER LH		1.00
50	J031050123	Lens head screw M5X12		4.00
51	93008015060	grommet		1.00