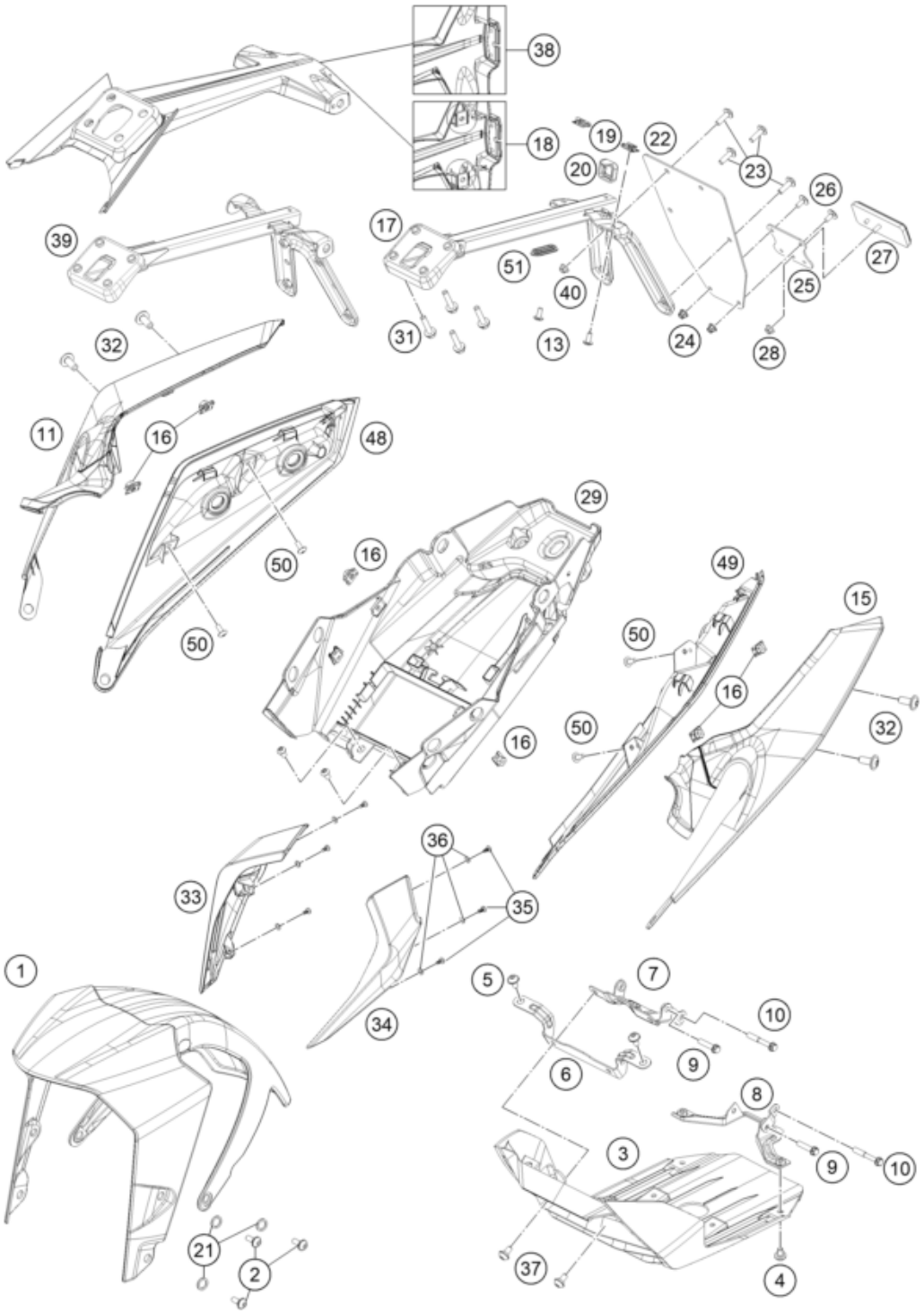


| Pos | Part Number | Description | Additional Text | Quantity |
|---|---|---|---|---|
| 1 | 9300801003330 | Front fender cpl. black | | 1.00 |
| 2 | J031050161 | Panhead screw with shoulder | | 6.00 |
| 3 | 93308020000 | Under-engine fairing 250/390 | | 1.00 |
| 4 | 93008020060 | Screw M6X1X9 | | 4.00 |
| 5 | 90508006001 | SOCKET HEAD BOLT M6X12 | | 2.00 |
| 6 | 93008021000 | Bracket belly pan front | | 1.00 |
| 7 | 93008021020 | Bracket belly pan rear | | 1.00 |
| 8 | 93008021120 | Bracket belly pan rear | | 1.00 |
| 9 | J025060144 | Hexagon srew M6X14 | | 4.00 |
| 10 | J025060359 | Hexagon screw M6X35 | | 2.00 |

| | | | | |
|---|---|---|---|---|
| 11 | 93008042100C1 | D250 MY20 ST COWL RH EB BL | | 1.00 |
| 13 | J031050123 | Lens head screw M5X12 | | 2.00 |
| 15 | 93008041100C1 | D250 MY20 ST COWL LH EB BL | | 1.00 |
| 16 | 90108050001 | CLIP NUT M5 | | 10.00 |
| 17 | 93008015200 | Structure assembly plate numbe | | 1.00 |
| 18 | 93008015050 | License plate holder support c | | 1.00 |
| 19 | 93008083010 | Clip Nut M5 | | 2.00 |
| 20 | 93008015010 | Protection rubber | | 1.00 |
| 21 | 93009059000 | Washer nylon | | 6.00 |
| 22 | 90808016000 | REAR FENDER EXT. | | 1.00 |
| 23 | 90508006003 | AH SCREW M6X1X20 | | 4.00 |
| 24 | 90102031010 | HEX NUT M5 AF8 | | 2.00 |
| 25 | 90514044000 | REFLECTOR MOUNTING | | 1.00 |
| 26 | J005050123 | FLAT HEAD SCREW M5X12 PH | | 2.00 |
| 27 | 90514045000 | REFLECTOR | | 1.00 |
| 28 | 90204060001 | HH COLLAR NUT | | 1.00 |
| 29 | 93008019000 | Tail end lower part | | 1.00 |
| 31 | J025060226 | Hex collar screw M6X22 | | 4.00 |
| 32 | 90508008001 | AH SCREW M8X20 | | 4.00 |
| 33 | 9300800100030 | Side mask right LED black | | 1.00 |
| 34 | 9300802400030 | Side mask left LED black | | 1.00 |
| 35 | J981030101 | Lens head screw M3,5X10 | | 6.00 |
| 36 | J125040003 | Washer plain small 4.5X8X0.5XB | | 6.00 |
| 37 | 93008040000 | Screw M6X1X13 | | 2.00 |
| 38 | 93008015150 | License plate holder support, | | 1.00 |
| 39 | 93008015300 | Licence plate holder support | | 1.00 |
| 40 | 90508016001 | Nut nyloc flanged M6X1XHT.9.1 | | 2.00 |
| 48 | 93008019030 | SEAT COWL LOWER RH | | 1.00 |
| 49 | 93008019020 | SEAT COWL LOWER LH | | 1.00 |
| 50 | J031050123 | Lens head screw M5X12 | | 4.00 |
| 51 | 93008015060 | grommet | | 1.00 |