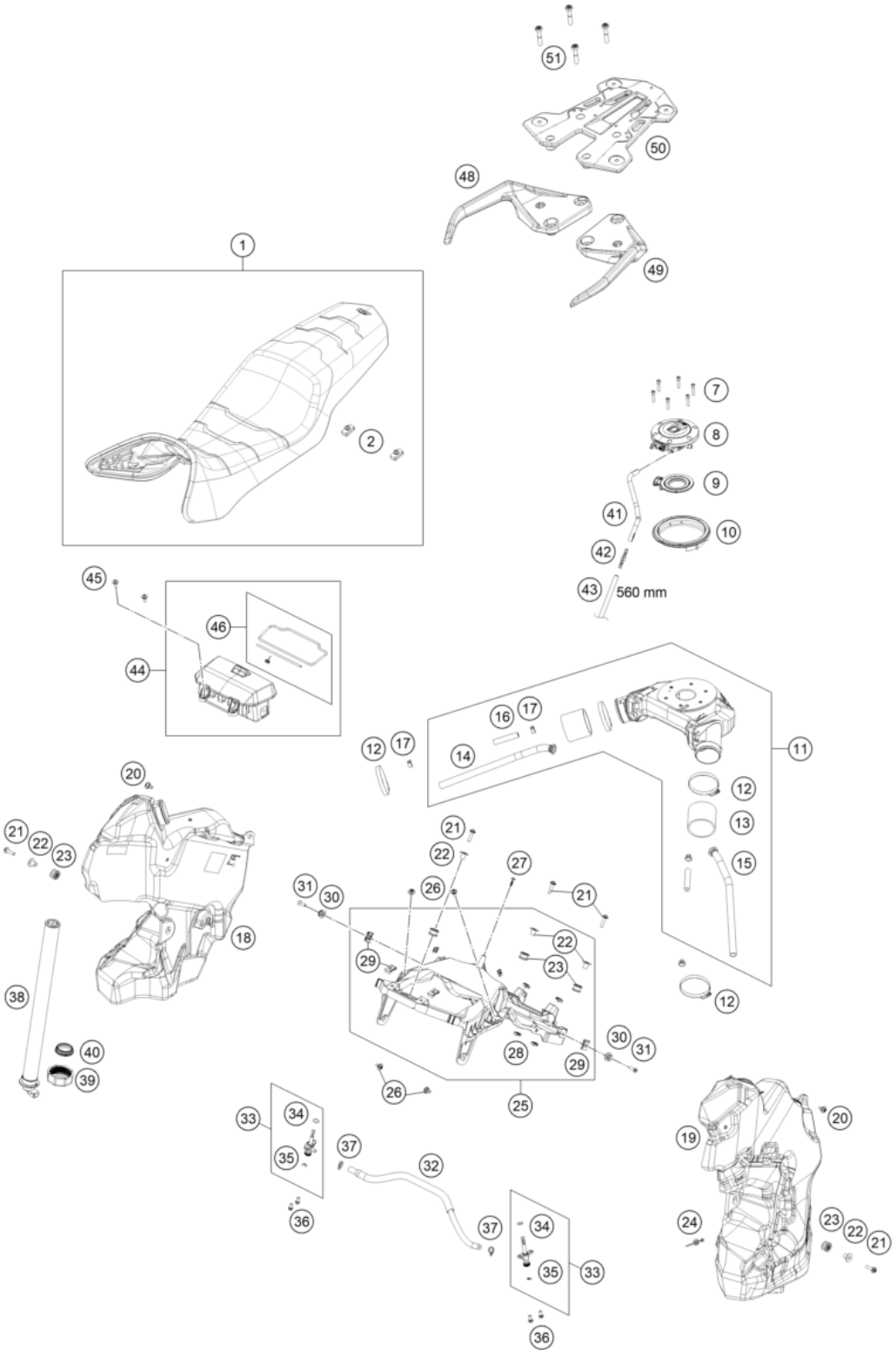

Pos	Part Number	Description	Additional Text	Quantity
1	61907140000	Seat R		1.00
2	28503002010	Rubber support		2.00
7	0912050253	AH SCREW DIN0912-M 5X25		6.00
8	61907008000	Fuel cap Race-on		1.00
9	61907008010	Gasket for fuel tank cap		1.00
10	61907009000	Fuel tank cap ring		1.00
11	61907013066	Fuel tank carrier w. manifold		1.00
12	51006027000	HOSE CLAMP 50-70MM		4.00

13	06000060056	Fuel hose, 60x67 L=56 mm		2.00
14	61907013071	Inner vent hose right		1.00
15	61907013070	Inner vent hose		1.00
16	60007416067	Fuel hose 6.4x3.2 L=67		2.00
17	00050140706	VARIABLE ONE-EAR CLAMP 14,0MM		4.00
18	61907013025	Fuel tank right cmpl.		1.00
19	61907013015	Fuel tank left cmpl.		1.00
20	83008100015	Special screw M6x15x5.5		2.00
21	0024060256	HH COLLAR SCREW M6X25 TX30		5.00
22	69007028000	COLLAR BUSH. 6,2X10X21X14MM 08		5.00
23	69007027000	rubber grommet, tank mounting		5.00
24	61711094100	Cable strap w.plug-in foot for		1.00
25	61907013055	Fuel tank carrier cpl.		1.00
26	83008000012	special screw M6x12x3		4.00
27	0081050181	SCREW FOR PLASTIC K50X18 T20	300 TPI Erzbergrodeo	1.00
28	54603048600	RANGE CHANGE METAL NUT M5 INOX		6.00
29	54603048100	clip nut M6		4.00
30	63507040070	Seat bushing		2.00
31	014581060201	Count.snk screw M6x20 TX30		2.00
32	61907117033	Tank compensation line cmpl.		1.00
33	58507003200	Fuel cock cmpl.		2.00
34	55007006200	O-RING 11X1,8 NBR 70		2.00
35	0799050000	TAB WASHER DIN6799 RS5		2.00
36	0025060126	HH collar screw M6x12 TX30		4.00
37	58031005000	CLAMP YDNAC 10128 12MM	FOR 12 LITER TANK	2.00
38	61907080000	Fuel level sensor		1.00
39	61907080020	Sleeve nut, fuel level sensor		1.00
40	61907080010	Gasket, fuel level sensor		1.00
41	61907020000	Pre-formed hose for tank overf		1.00
42	69015019010	HOSE CONNECTION STRAIGHT		1.00
43	78015019000	HOSE EPA D=6/10 L=2000MM		1.00
44	61912078033C1	Storage compartment cmpl.		1.00
45	69008021040	special screw M6x14		2.00
46	61912078044	Repair kit storage compartment		1.00
48	61912009000	Grip handle right		1.00
49	61912008000	Grip handle left		1.00
50	61912010050C1	Baggage carrier plate		1.00
51	0035080406	AH-COLLAR SCREW M8X40 ISA45		4.00