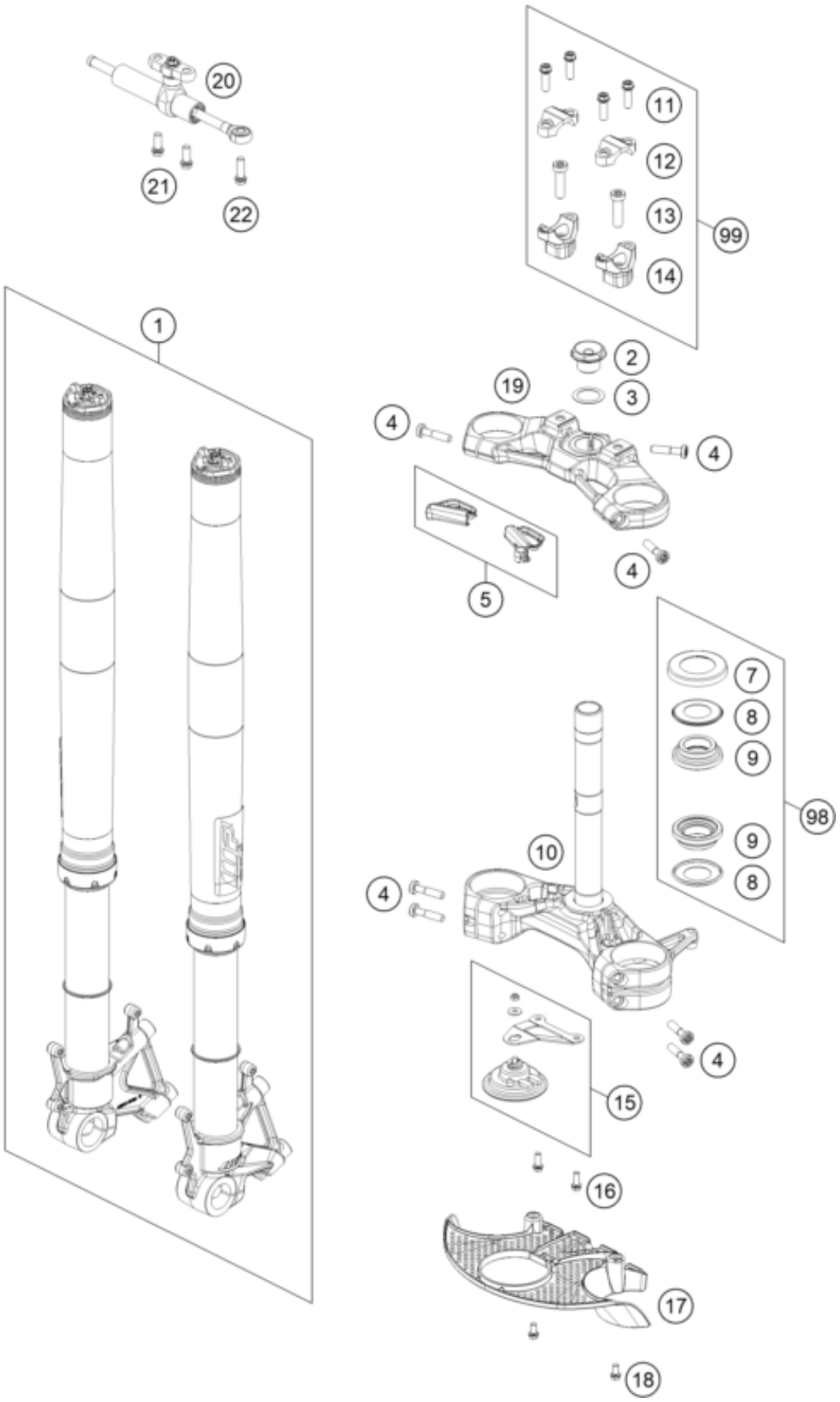

Pos	Part Number	Description	Additional Text	Quantity
1	14188U2501	Fork KTM 1290 Super Adventure		1.00
2	6900103600033	Steering head screw		1.00
3	0988253505	thrust wash DIN0988-25x35x0,5		1.00
4	0035080356	AH-COLLAR SCREW M8X35 ISA45		7.00

5	61901034010	Triple clamp cable protection		1.00
7	69001086100	PROT. RING STEER. HEAD BEARING		1.00
8	69001084100	Stearing head gasket		2.00
9	69001181000	STEERINGHEAD KPL.17		2.00
10	61901032032C1	Bottom triple clamp cmpl. X=32		1.00
11	0025080256	HH collar screw M8x25	A400C102Z106102	4.00
12	7720103800030	HANDLEBAR CLAMP 28MM		2.00
13	0032100356S	AH-COLLAR SCREW M10X35 ISA45		2.00
14	5940103904230	Handlebar mount D28mm-H42mm		2.00
15	61911060033	Horn cmpl.		1.00
16	0025060166	HH collar screw M6x16 TX30		2.00
17	61908024100	Triple clamp cover, bottom		1.00
18	0025060126	HH collar screw M6x12 TX30		2.00
19	61901034032C1	Top triple clamp, X=32 mm		1.00
20	16181N53ES	STEERING DAMPER CPL.		1.00
21	0025080206S	HH collar screw M8x20 TX40 SL		2.00
22	0025080256S	HH COLLAR SCREW M8X25 TX40		1.00
98	69001181010	Stearing head rep. Kit		0.00
99	00050000933	HANDLEBAR SUPPORT KIT D28mm/H4		0.00