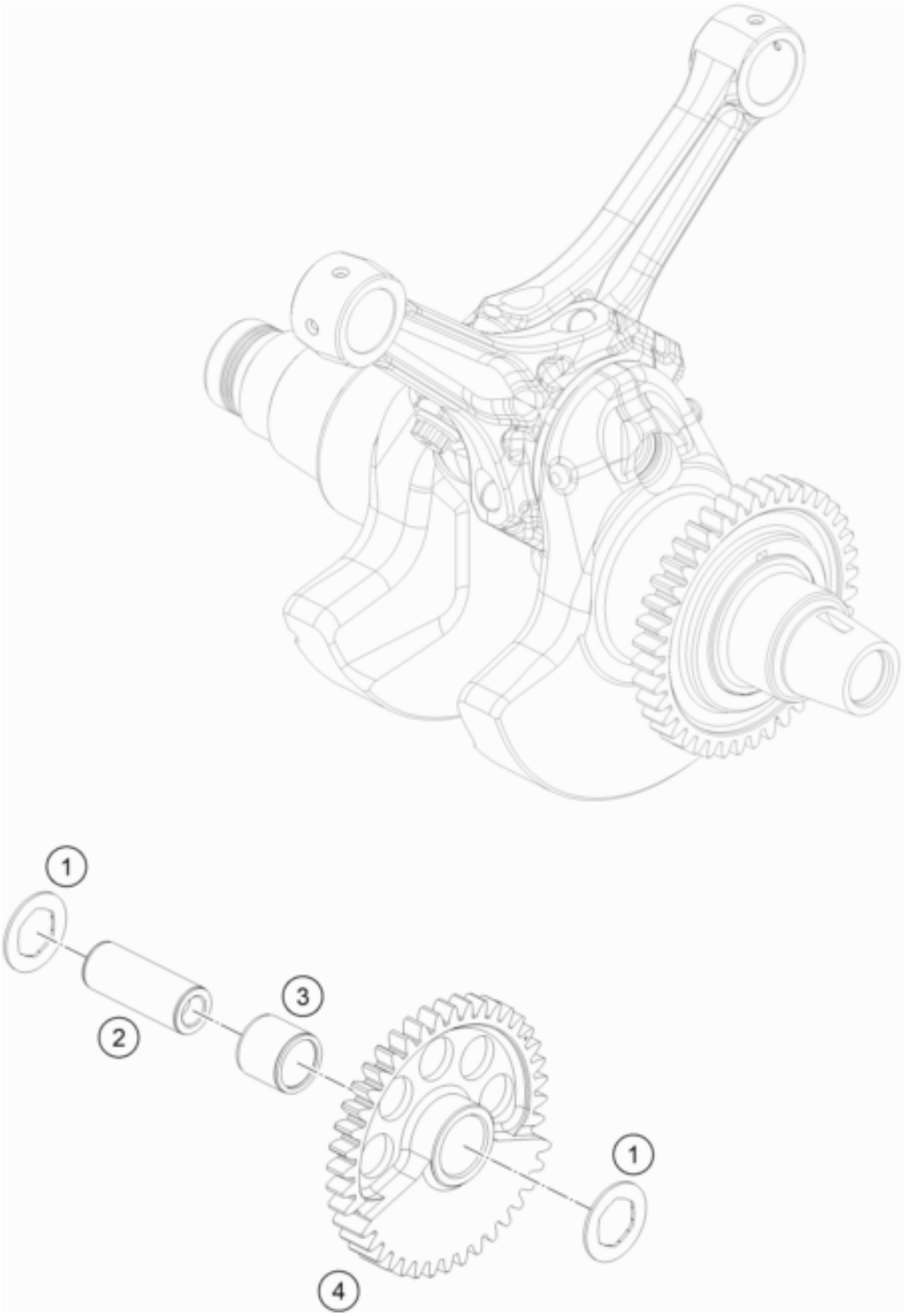


| Pos | Part Number | Description | Additional Text | Quantity |
|---|---|---|---|---|
| 1 | 61230057060 | STOP DISK 15,2X25X1 | | 2.00 |
| 2 | 61730058050 | Bearing bolt Ø15x49 | | 1.00 |
| 3 | 0405151917 | needle roller and cage assy. K | | 1.00 |
| 4 | 61330058000 | BALANCER SHAFT FRONT | | 1.00 |