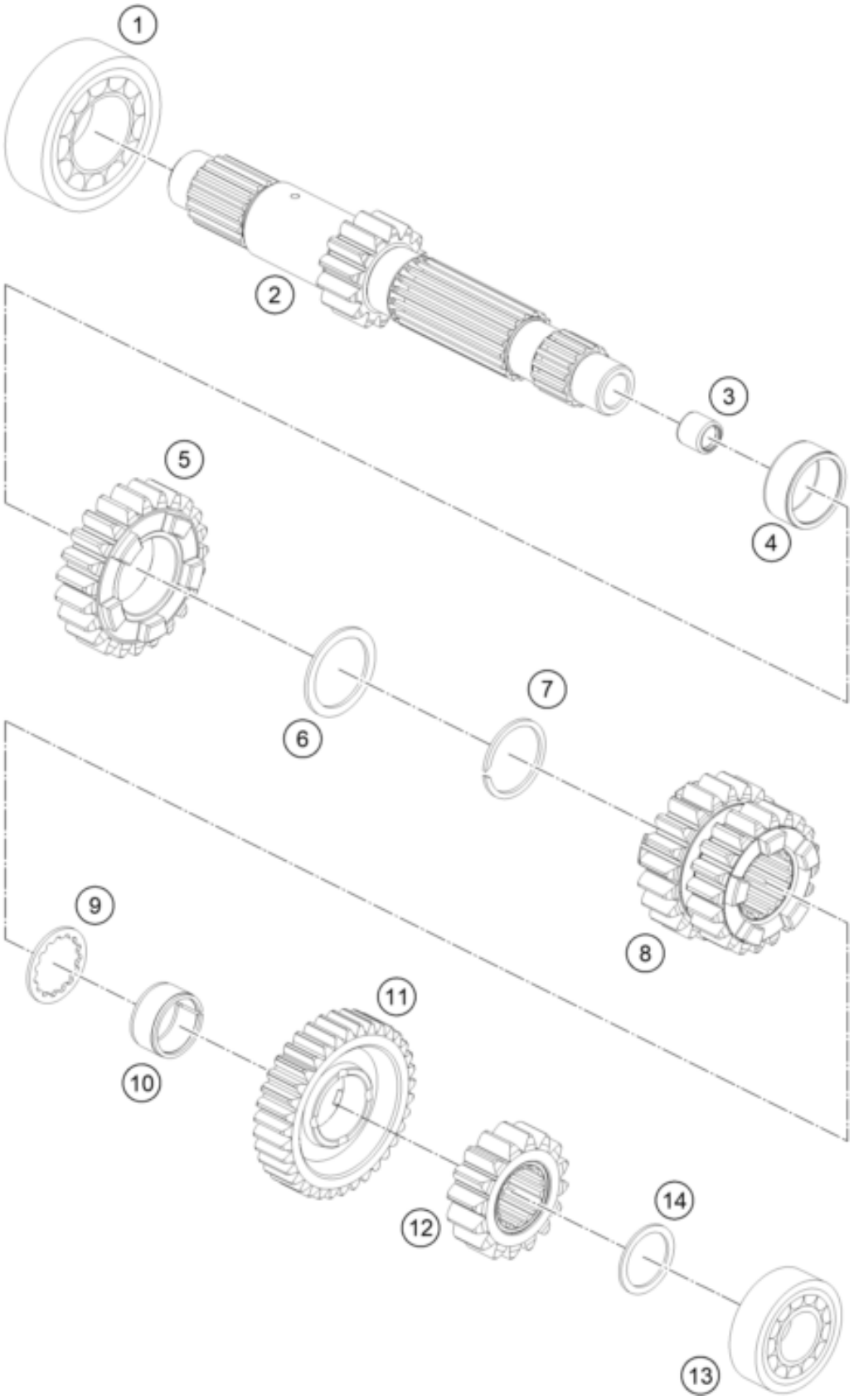

Pos	Part Number	Description	Additional Text	Quantity
1	0625062062	BALL BEARING 6206 C3 J1 NSK		1.00
2	61733001000	Main shaft 12 teeth		1.00
3	0618091312	NEEDLE BUSH HK0912 9/13/12 03		1.00
4	0405263113	NEEDLE BEAR. K 26-31-13		1.00
5	61733005000	Idler gear, 5th gear		1.00

6	61233042000	STOP DISK 27,9/35,75/1,5		1.00
7	0417270150	LOCK RING SW 27		1.00
8	61733003000	Sliding gear 3rd/4th gear		1.00
9	61233041000	STOP DISK 22,2/30,2/1,5		1.00
10	0405222613	NEEDLE BEAR. K 22X26X13 TN		1.00
11	61933006000	Idle gear 6th gear		1.00
12	61733002000	Fixed gear 2nd gear		1.00
13	0625062040	BALL BEARING 6204 DU J1 C3		1.00
14	60033040015	STOP DISK 20,2X28X1,5		0.00
14	60033040016	STOP DISK 20,2/28/1,6		0.00
14	60033040017	STOP DISK 20,2/28/1,7		0.00
14	60033040018	STOP DISK 20,2/28/1,8		0.00
14	60033040019	STOP DISK 20,2/28/1,9		0.00
14	60033040020	STOP DISK 20,2/28/2,0		0.00
14	60033040021	STOP DISK 20,2/28/2,1		0.00
14	60033040022	STOP DISK 20,2/28/2,2		0.00