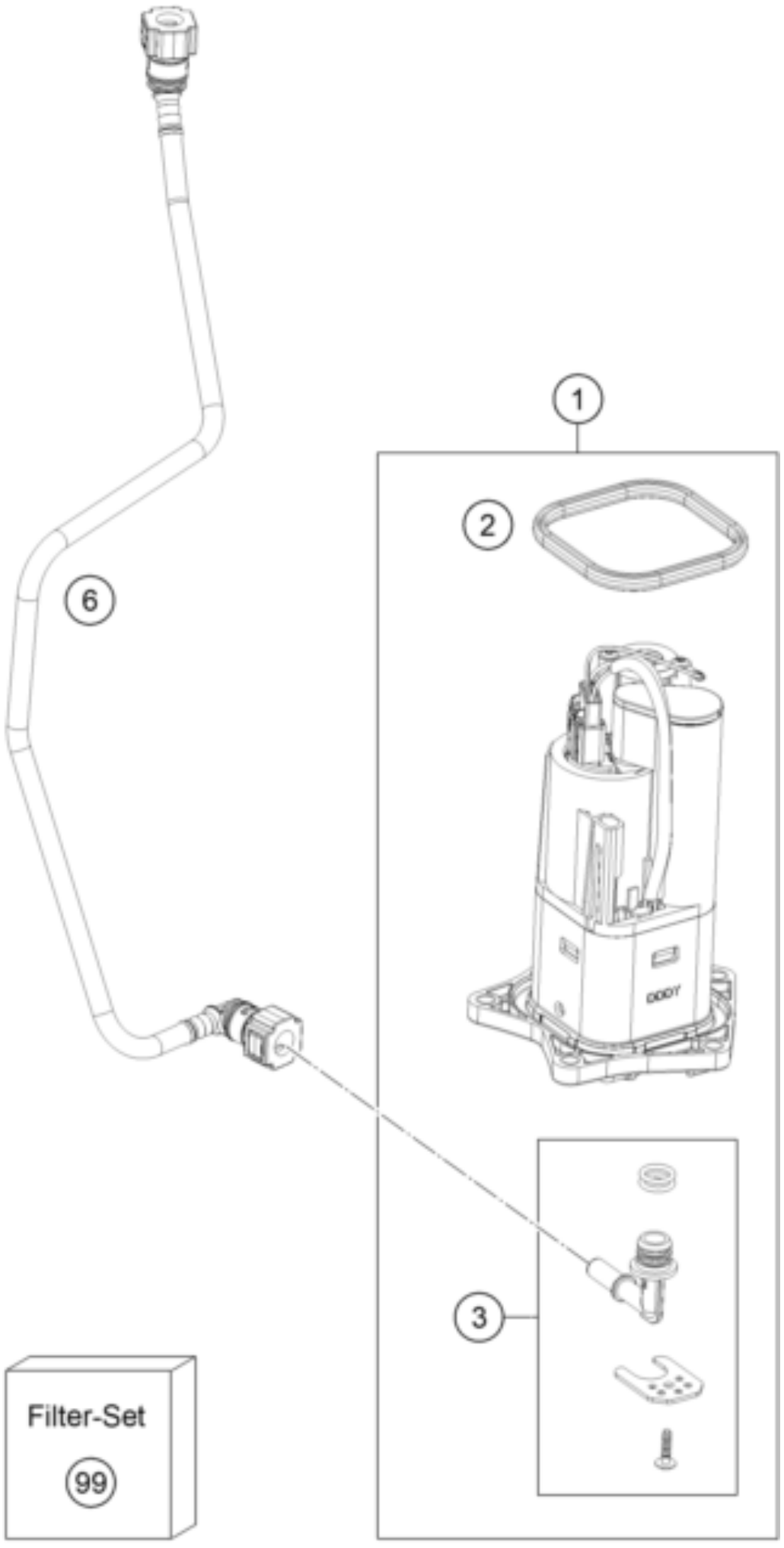
1
2
6
3
Filter-Set
99

Pos	Part Number	Description	Additional Text	Quantity
1	64107088000	Fuel pump cpl.		1.00
2	64107189000	Sealing		1.00
3	64107092000	Hydraulic connection		1.00
4	61907087010	Cover fuel pump		1.00
5	0025060166	HH collar screw M6x16 TX30		5.00
6	61907016000	Fuel hose, pump cmpl.		1.00
99	64107090000	Filter kit		0.00