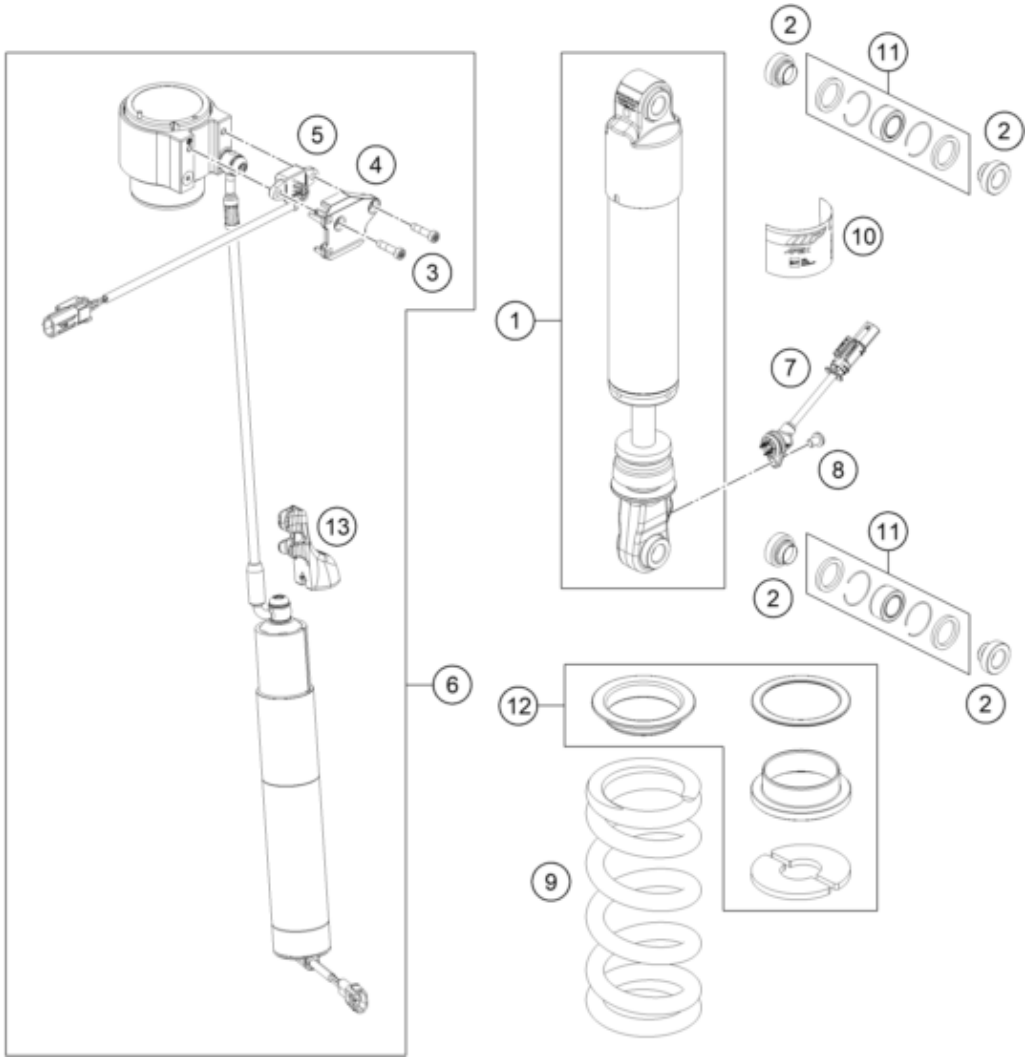

Pos	Part Number	Description	Additional Text	Quantity
1	46140029S2	Shock KTM 1290 Adv SAFe 2021		1.00
2	46181138	Bearing bush 14x15,03/18,5/24,		4.00
3	014580050203S	Cap hd. screw DIN14580 M5x20 P		2.00
4	S938100000000C1	PA cover		1.00
5	60000288	sensor linear PA 20mm		1.00
6	11001T02S01	PA Super Adventure S 21 Elektr		1.00
7	10000250	wire Hirschmann I750 semi acti		1.00
8	00700005	HS flat head screw M6x8 acc dr		1.00
9	91010365	Mainspring (59)160-198,5 dampe		1.00
10	52000217	sticker APEX SAT 90x40		1.00
11	R12012T	Ball joint bearing kit top 12m		0.00
12	RP10031T	Repair kit spring retainer sho		0.00
13	61908027050	Damage protection PA screw		1.00