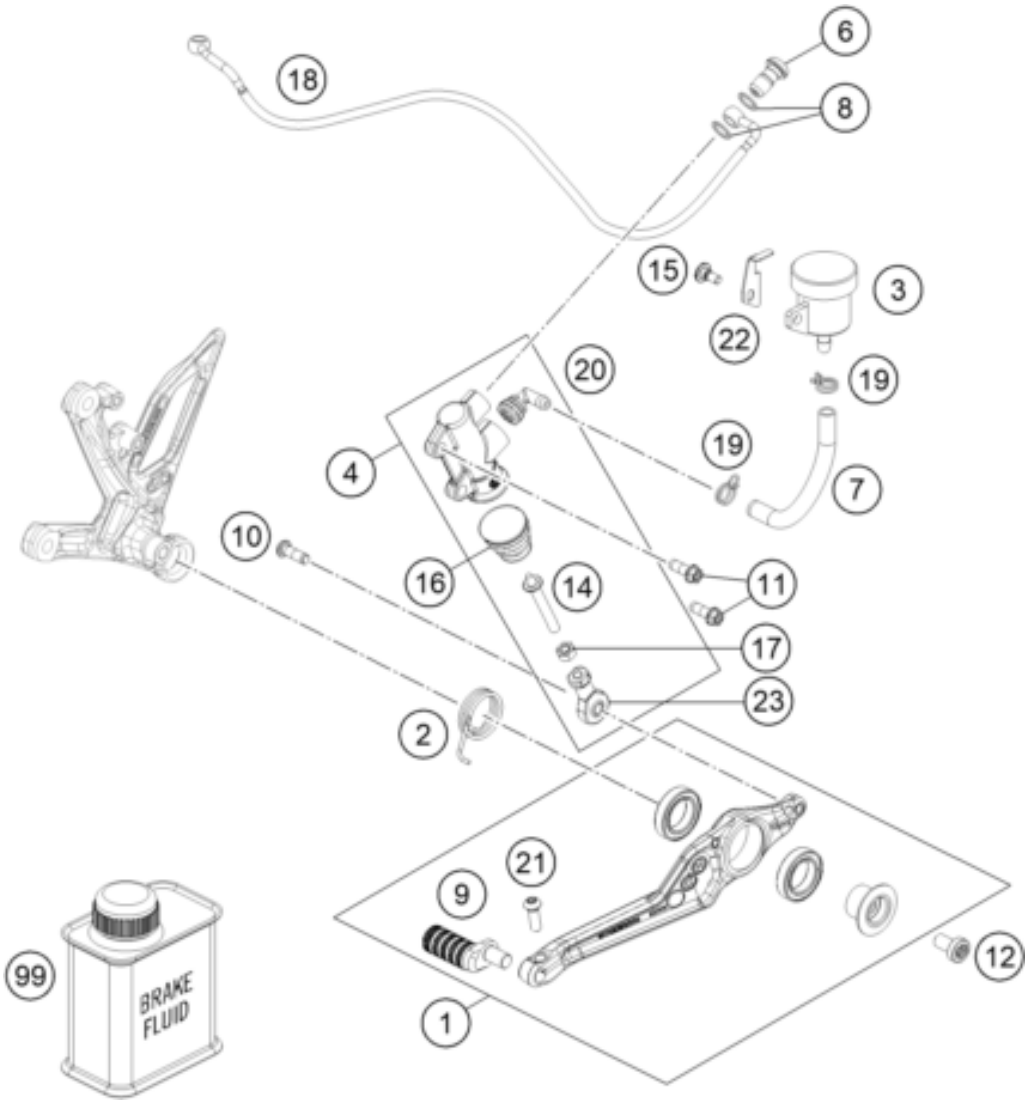


| Pos | Part Number | Description | Additional Text | Quantity |
|---|---|---|---|---|
| 1 | 61713050133C1 | Rear brake lever cmpl. | | 1.00 |
| 2 | 61713052000 | Leg spring | | 1.00 |
| 3 | 61713069044 | Brake fluid reservoir cmpl. | | 1.00 |
| 4 | 61713060000C1 | Rear master cylinder | | 1.00 |
| 6 | 62113020100 | banjo bolt M10x1x19.5 | | 1.00 |
| 7 | 58007016101 | HOSE FOR RESERVOIR 6X1,5 | | 1.00 |
| 8 | 0603100141 | sealing ring DIN 7603 10x14x1 | ONLY FOR LC4 ADVENTURE | 2.00 |
| 9 | 61713051000C1 | Footbrake lever step plate | | 1.00 |
| 10 | 0738060185S | oval head screw M6x18 A2-70 S | | 1.00 |
| 11 | 0025060166S | HH collar screw M6x16 TX30 SL | | 2.00 |
| 12 | 0035080156S | AH-COLLAR SCREW M8X15 TORX45 | | 1.00 |
| 14 | 60313056044 | PUSH ROD CPL. | | 1.00 |
| 15 | 69013099150 | Screw, reservoir | | 1.00 |
| 16 | 54513151000 | RUBBER SLEEVE | | 1.00 |
| 17 | 0926080003 | STOP NUT DIN6926 M8 SS | | 1.00 |
| 18 | 61742002000 | Brake line rear master cylinde | | 1.00 |
| 19 | 58007017000 | YDNAC-clamp 10101 (10.4MM) | 300 TPI Erzbergrodeo | 2.00 |
| 20 | 54513155000 | ANGLE PIECE | | 1.00 |
| 21 | 0738060185 | Round head scr. ISR M6x18-A2-7 | | 1.00 |

| | | | | |
|---|---|---|---|---|
| 22 | 61713069020 | Lock washer, brake fluid reser | | 1.00 |
| 23 | 54603069000 | SWIVEL HEAD M6 FOOT BRAKE LEV. | | 1.00 |
| 99 | 00062030000 | Brake fluid DOT5.1 0,25L | | 1.00 |