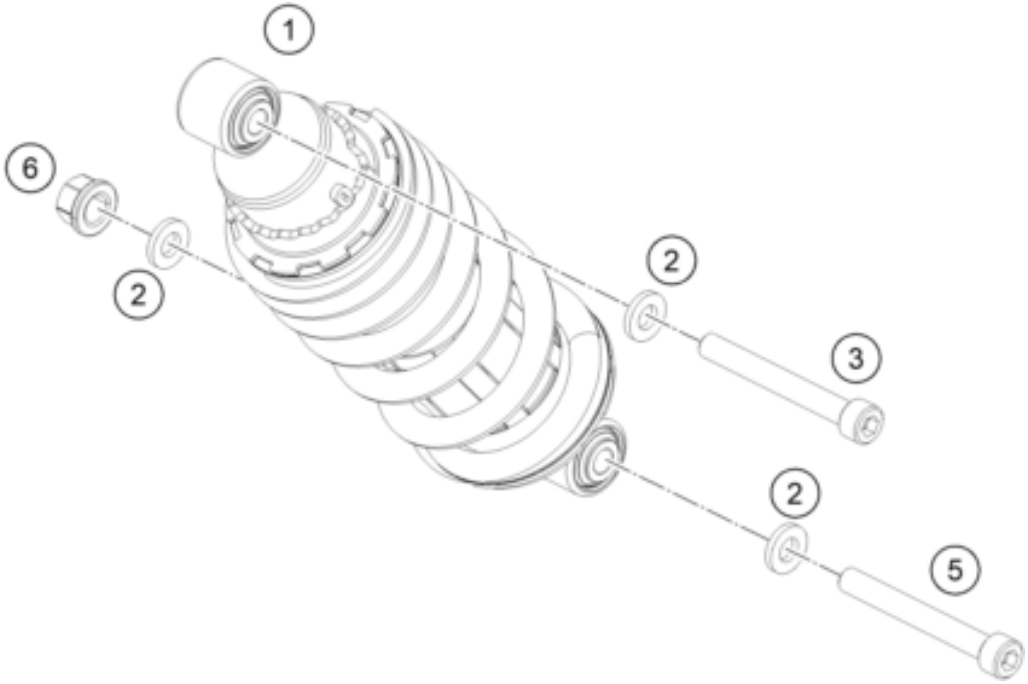

Pos	Part Number	Description	Additional Text	Quantity
1	94104010044	Shock absorber cmpl.		1.00
2	90104010003	PLAIN WASHER 10,2X20X3MM		3.00
3	93004016100	hexagon socket screw M10X1.25X		1.00
5	J020100806	SHCS M10x1.25x80 - 10.9		1.00
6	90104010002	flanged hex nut M10x1.25 WS13		1.00